1920
C81

E. L. Connell

Design of a Universal Portable Electric Drill

DESIGN OF A UNIVERSAL PORTABLE ELECTRIC DRILL

BY

EDWIN LEWIS CONNELL
B. S. University of Illinois, 1912

THESIS

Submitted in Partial Fulfillment of the Requirements for the

Degree of

ELECTRICAL ENGINEER

IN

THE GRADUATE SCHOOL

OF THE

UNIVERSITY OF ILLINOIS

1920

1920
C81

UNIVERSITY OF ILLINOIS

THE GRADUATE SCHOOL

April 27, 1920

I HEREBY RECOMMEND THAT THE THESIS PREPARED BY

Edwin Lewis Connell

ENTITLED Design of a Universal Portable Electric Drill

BE ACCEPTED AS FULFILLING THIS PART OF THE REQUIREMENTS FOR THE

PROFESSIONAL DEGREE OF Electrical Engineer

Ellery B. Paine

Head of Department of Electrical Engineering.

Recommendation concurred in:

James Theron Flood
G. A. Goodenough
Ellery B. Paine
} Committee

453921

Digitized by the Internet Archive
in 2013

http://archive.org/details/designofuniversa00conn

1920
C81

PREFACE

In presenting this subject I am giving the results of an investigation begun in the Fall of 1917. The portable tool is a comparatively recent development and it cannot be said that it has yet reached perfection. The Van Dorn Electric Tool Co., for whom this work is being done is the recognized leader in the electric tool industry and perhaps the only manufacturer of such apparatus who designs and builds the motors used in the machines manufactured.

I believe that the future of the portable electric tool lies in development according to the following plan;

1. The universal tool for general purpose drilling to 5/8" in steel to be operated from the lighting circuit and rated within the 660 watt limit accordingly.

2. For drilling over 5/8" and reaming of all sizes, the DC or polyphase AC tool. The DC motor would be of the series or heavily compounded type and the AC motor of the inductive type with high resistance rotor.

3. For portable grinders except tool post types for very light work, the DC motor slightly compounded or polyphase AC induction motor.

Edwin L. Connell

3-25-'20

THE RARE BOOK &
UIUC
MANUSCRIPT LIBRARY

CONTENTS

SECTION	PAGE
CHAPTER I - HISTORY	1
1. THE UNIVERSAL MOTOR	1
2. MECHANICAL DEVELOPMENT	3
3. SWITCHES	3
CHAPTER II - BASIC REQUIREMENTS	
1. POWER AND SPEED	13
2. MECHANICAL FEATURES	13
3. ELECTRICAL FEATURES	14
4. ADAPTABILITY	15
5. ACCESSABILITY	16
CHAPTER III - THEORY OF THE UNIVERSAL MOTOR	
1. FUNDAMENTAL THEORY	18
2. THE FIELD	18
3. THE ARMATURE	23
4. COMMUTATION	
CHAPTER IV - MOTOR DESIGN	
1. CALCULATIONS	28
2. BRUSH HOLDER AND BRUSHES	37
3. SWITCH	37

CHAPTER V - MECHANICAL DESIGN

1. MOTOR HOUSING, HANDLES ETC. 38

2. GEARING 38

3. BEARINGS 42

4. CHUCKS AND SOCKETS 45

CHAPTER VI - TESTS

1. MOTOR PERFORMANCE 47

2. HEATING AND BRUSH WEAR 47

3. DRILLING PERFORMANCE 48

CHAPTER VII - CONCLUSION

1. COMPARATIVE PERFORMANCE 58

2. PATENT STATUS 58

APPENDIX

1. HOCHHAUSEN PATENT

2. BURKE PATENT

ILLUSTRATIONS

FIGURE	TITLE	PAGE
1	FIRST HALF INCH DC DRILL	4
2	HALF INCH DC DRILL - 1910	5
3	FIRST HALF INCH UNIVERSAL DRILL	6
4	HALF INCH UNIVERSAL DRILL - 1913	7
5	SWITCH FOR HALF INCH DRILL	8
6	" " " " "	9
7	" " " " "	10
8	" " " " "	11
9	" " " " "	12
10	VECTOR DIAGRAM OF AC SERIES MOTOR	19
11	DISTRIBUTED FIELD WINDING	21
12	CONCENTRATED FIELD WINDING	23
13	NORMAL PATH OF ARMATURE FLUX	23
14	METHOD OF REDUCING ARMATURE FLUX	29
15	ARMATURE PUNCHING	31
16	ARMATURE CONNECTIONS	32
17	COMMUTATOR	34
18	INDUCTION CURVE	35
19	EFFECTIVE AIR GAP COEFFICIENT	40
20	NEW HALF INCH DRILL	43
21	BEARING LOAD DIAGRAM	50
22	PERFORMANCE WITH BRUSHES AT 0°	51
23	PERFORMANCE AT 15°	52
24	PERFORMANCE AT 30°	53
25	PERFORMANCE AT 45°	54

FIGURE	TITLE	PAGE
26	PERFORMANCE AT 60°	54
27	EFFECT OF ANGLE AT FULL LOAD	55
28	PERFORMANCE OF APPROVED MOTOR	56
29	HEAT RUN	57
30	PERFORMANCE OF OLD MOTOR	59

DESIGN OF
A UNIVERSAL PORTABLE ELECTRIC DRILL

CHAPTER 1

HISTORY

1. THE UNIVERSAL MOTOR

With the realization of the advantages of alternating current distribution there began the development of motors suitable for operation on such circuits. In certain classes of service the alternating current motor has been slow in showing its superiority over the direct current motor. This is particularly true where variable and adjustable speeds are required. The result is that certain parts of a community, usually the heart of our larger cities, will be found to be supplied with direct current and the outlying districts will be supplied with alternating current. This situation lead to the demand for an alternating current motor with the characteristics of the direct current series motor and for a motor capable of operating on either supply.

It has been known for many years that a direct current series motor will operate on alternating current by virtue of the fact that the reversals of the current are accompanied by reversals of the field so that a continuous torque in one direction is obtained. The motor now known as the universal motor was developed from the direct current series

motor by incorporating such features as are necessary to give efficient operation on alternating current and approximately the same performance on both kinds of current. The first patents on such features were issued to Wm. Hochausen in 1893. A copy of this patent will be found in the appendix. The important features of the Hochausen motor are the laminated field and the relatively strong armature. One case is cited with total field turns 93 and total armature turns 390 which would mean a relative strength in ampere turns per pole of about 2 to 1.

In 1909 James Burke applied for patents on a universal motor which were granted in 1913. This patent has been bitterly contested because he has attempted to collect royalty from every manufacturer of a universal motor. Recent suits have been decided against him on the ground that some of his claims were covered by the Hochausen patent. The claims which Burke seems to be entitled to are the use of a distributed field winding and skewed armature slots giving a shaded magnetic pole and permitting the brushes to be displaced from neutral to the point giving the closest approximation to equal performance on alternating and direct current. This patent will also be found in the appendix. These features are not essential in a good universal motor and it is hard to see how brush displacement against rotation can be classed as a new discovery. He uses a displacement of 50° to 58°, far more than that employed in direct current motors, which probably means that infringement of this claim would rest on the angle of displacement employed.

The first portable drills incorporating the universal motor were put on the market ten or twelve years ago.

2. MECHANICAL DEVELOPMENT

The mechanical development of the portable drill began in the direct current tool. Fig. 1 shows a ½" portable direct current drill put on the market in 1909. This tool served chiefly as a guide on how not to build a portable drill and was superseded in 1910 by the design shown in Fig. 2. The first universal tool of ½" capacity was put on the market in 1912. See Fig. 3. This machine was completely re-designed about a year later and has been manufactured with only detail changes up to the present time. See Fig. 4. The motor of this machine is licensed under the Burke patent.

3. SWITCHES

There was no more troublesome problem in the development of the portable drill than that of the switch. The development of the switch may be traced in Figs. 5, 6, 7, 8 and 9. It is to be noted that the switches without quick make and break were very quickly discarded. Notice that the tool shown in Fig. 1 was equipped with a commercial snap switch . It has been found that the knife contact even though the break is quick is not satisfactory.

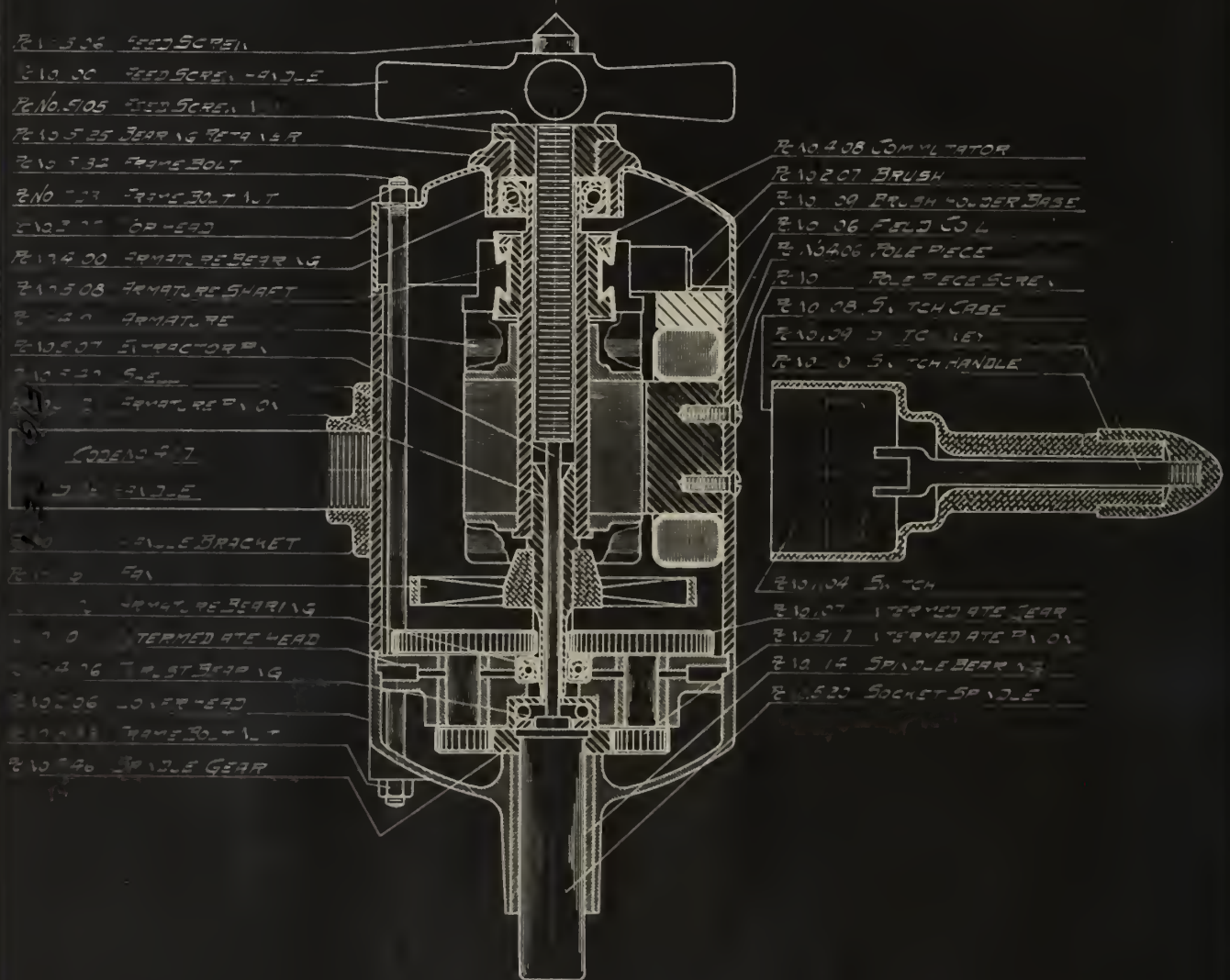

PART LIST OF
DI MACHINE (OLD STYLE)
U.S.

3-8-20

D-1

THE LIBRARY
OF THE
UNIVERSITY OF ILLINOIS

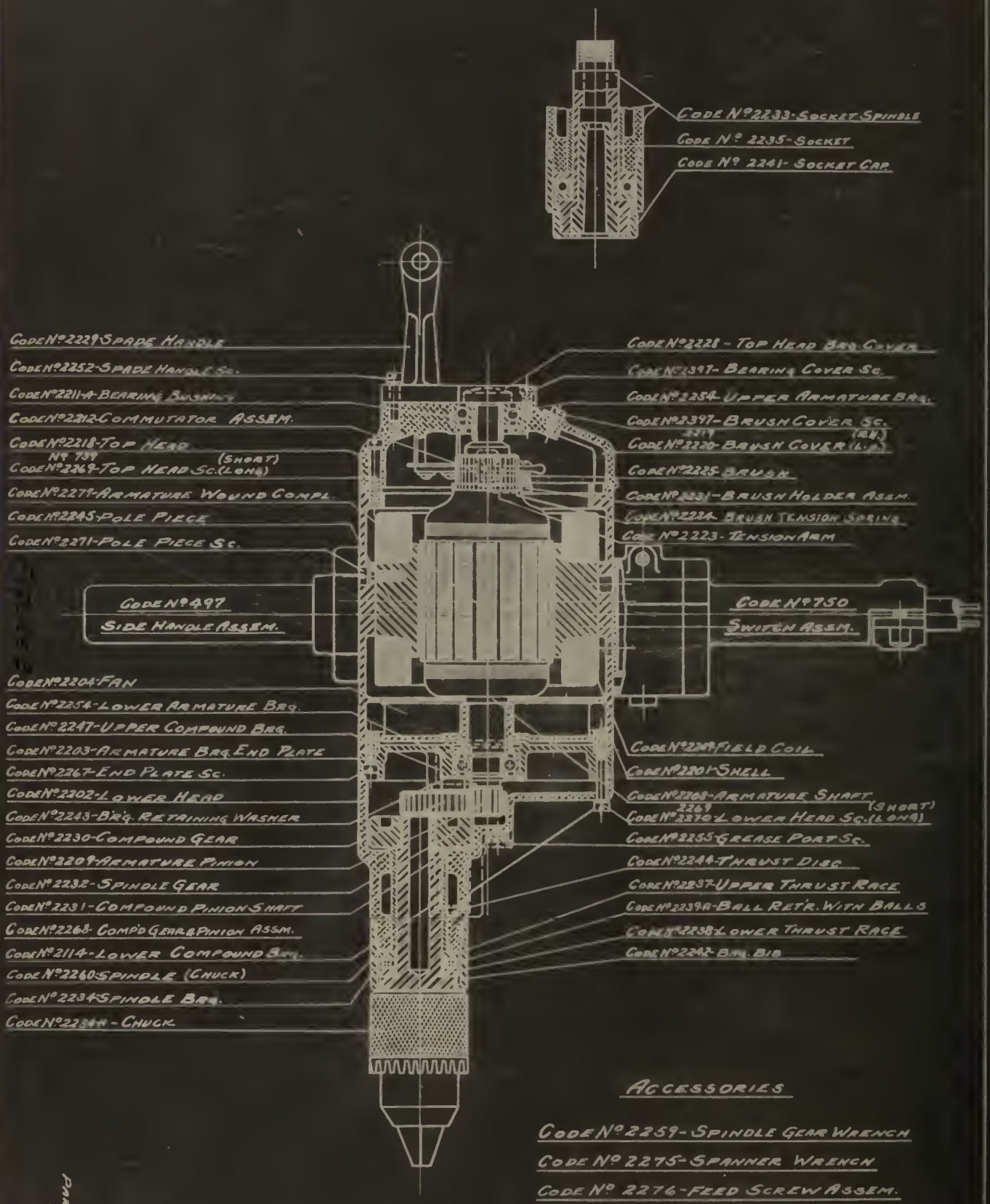

Accessories

Code No. 2259 - Spindle Gear Wrench
Code No. 2275 - Spanner Wrench
Code No. 2276 - Feed Screw Assem.
Code No. 2281 - Breast Plate Assem.
Code No. 2284 B - Chuck Key

Special

Code No. 2260-S - Socket

NOTE:-
When Ordering Parts Always Give Code No., Serial No., Type, R.P.M. & Voltage on Name Plate

Part List Assembly For No. 2200 Machine.
3-2-20
2200

THE LIBRARY
OF THE
UNIVERSITY OF ILLINOIS

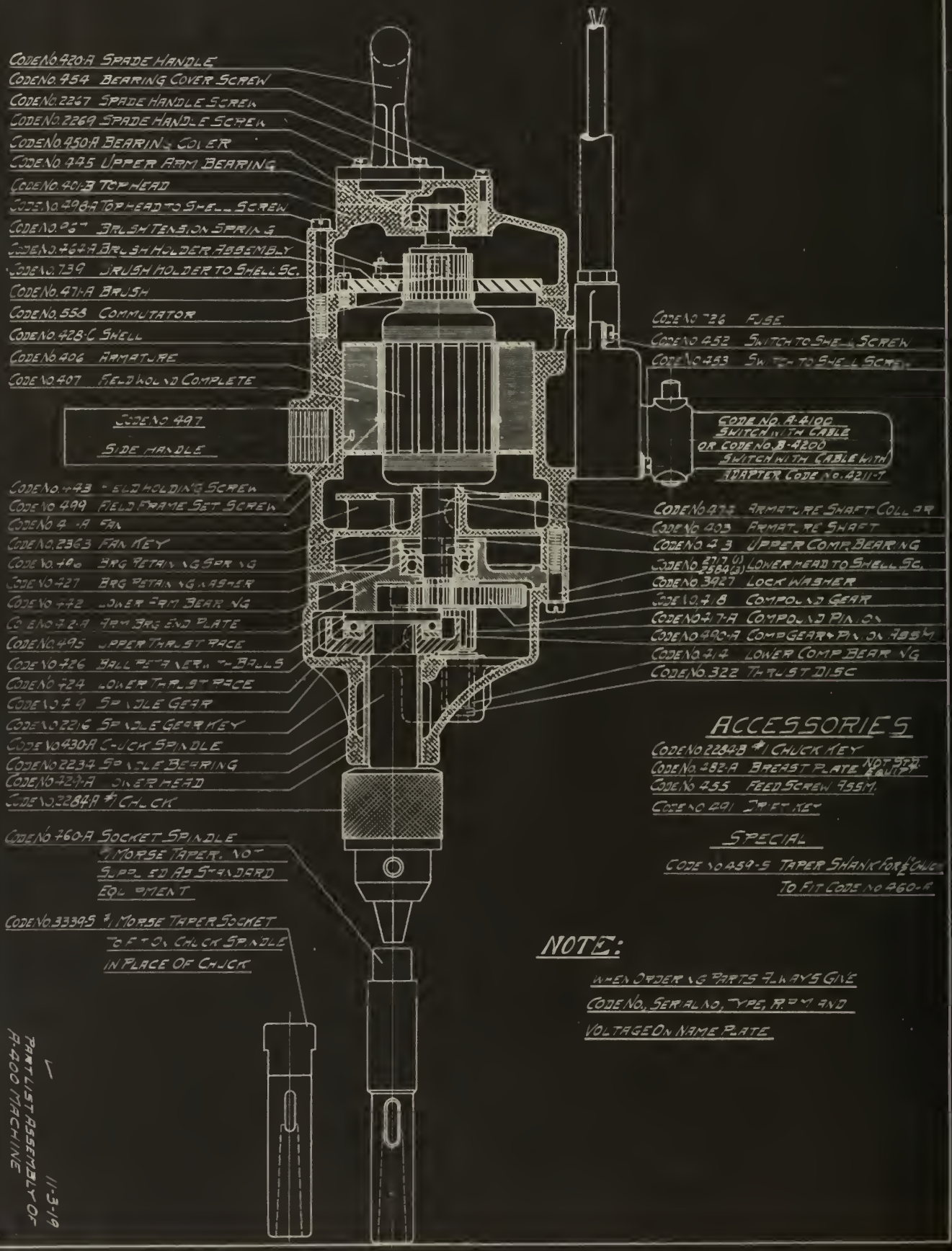
Code No. 420-A Spade Handle
Code No. 454 Bearing Cover Screw
Code No. 2267 Spade Handle Screw
Code No. 2269 Spade Handle Screw
Code No. 450-A Bearing Cover
Code No. 445 Upper Arm Bearing
Code No. 401-B Top Head
Code No. 298-A Top Head to Shell Screw
Code No. 437 Brush Tension Spring
Code No. 464-A Brush Holder Assembly
Code No. 739 Brush Holder to Shell Sc.
Code No. 471-A Brush
Code No. 558 Commutator
Code No. 428-C Shell
Code No. 406 Armature
Code No. 407 Field Wound Complete
Code No. 497 Side Handle
Code No. 443 Field Holding Screw
Code No. 499 Field Frame Set Screw
Code No. 4 -A Fan
Code No. 2363 Fan Key
Code No. 440 Brg Retaining Spring
Code No. 427 Brg Retaining Washer
Code No. 442 Lower Arm Bearing
Code No. 442-A Arm Brg End Plate
Code No. 495 Upper Thrust Race
Code No. 426 Ball Retainer with Balls
Code No. 424 Lower Thrust Race
Code No. 429 Spindle Gear
Code No. 2216 Spindle Gear Key
Code No. 430-A Chuck Spindle
Code No. 2237 Spindle Bearing
Code No. 424-A Inner Head
Code No. 2284-A 1/4 Chuck
Code No. 460-A Socket Spindle
1 Morse Taper. Not
Supplied As Standard
Equipment
Code No. 3339-S 1/4 Morse Taper Socket
To Fit On Chuck Spindle
In Place Of Chuck
Code No. 426 Fuse
Code No. 452 Switch to Shell Screw
Code No. 453 Switch to Shell Screw
Code No. A-4100
Switch with Cable
OR Code No. B-4200
Switch with Cable with
Adapter Code No. 4211-T
Code No. 472 Armature Shaft Collar
Code No. 403 Armature Shaft
Code No. 443 Upper Comp. Bearing
Code No. 2717 (2) 2864 (2) Lower Head to Shell Sc.
Code No. 3927 Lock Washer
Code No. 418 Compound Gear
Code No. 417-A Compound Pinion
Code No. 490-A Comp Gear & Pinion 795M
Code No. 414 Lower Comp Bearing
Code No. 322 Thrust Disc
ACCESSORIES
Code No. 2284-B 1/4 Chuck Key
Code No. 482-A Breast Plate NOT SUPPLIED EQUIPMENT
Code No. 455 Feed Screw 795M.
Code No. 491 Inlet Key
SPECIAL
Code No. 459-S Taper Shank For 5/8" Chuck
To Fit Code No. 460-A
NOTE:
When Ordering Parts Always Give
Code No., Serial No., Type, R.P.M. and
Voltage On Name Plate
11-3-19
Part List Assembly of
A-400 Machine
U.M.S.
A-400

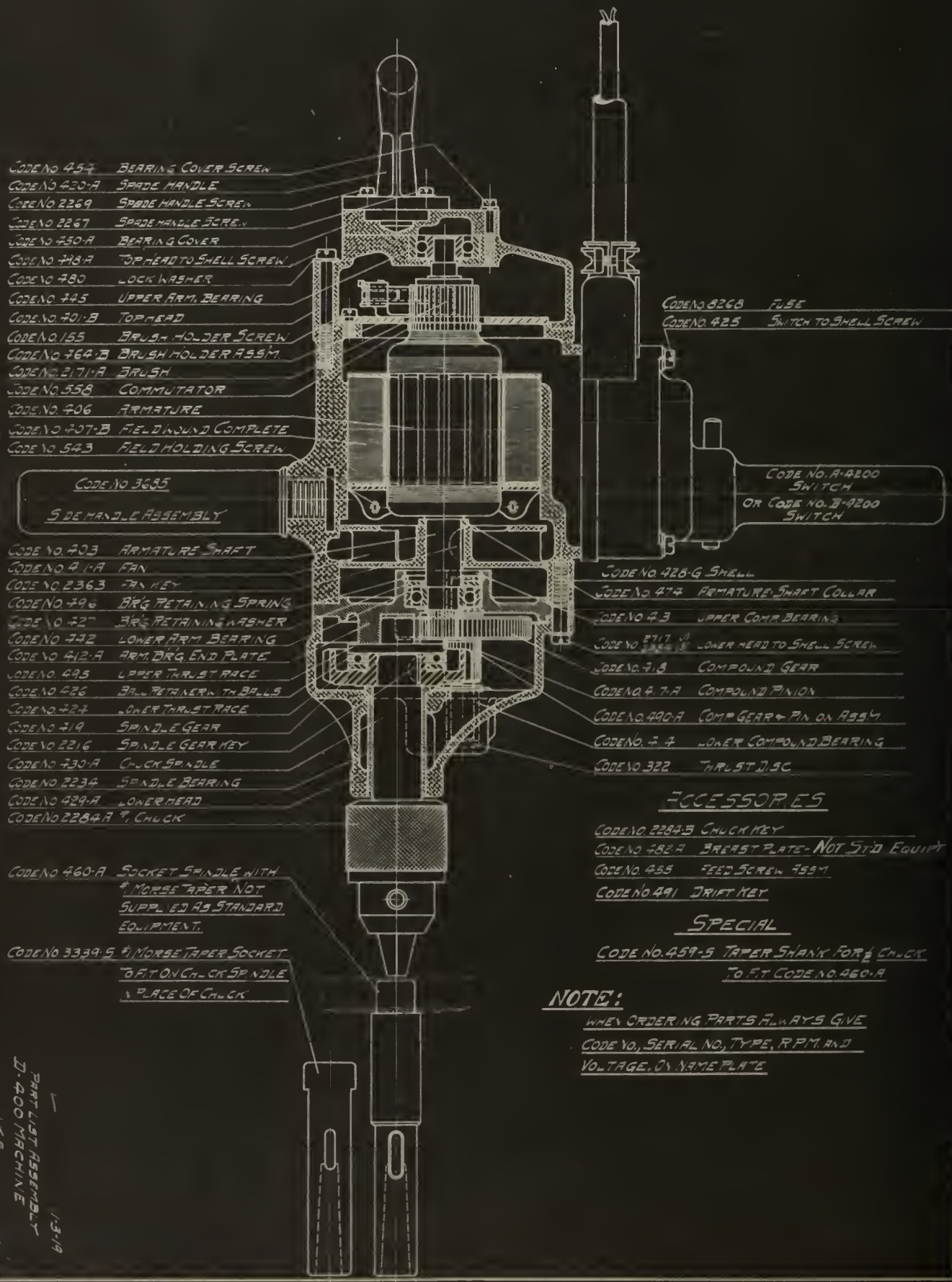

ACCESSORIES

CODE NO. 2284-B CHUCK KEY
CODE NO 782-A BREAST PLATE - NOT STD EQUIPT
CODE NO. 455 FEED SCREW ASS'M
CODE NO 491 DRIFT KEY

SPECIAL

CODE NO. 459-S TAPER SHANK FOR 1/2" CHUCK TO FIT CODE NO. 460-A

NOTE:

WHEN ORDERING PARTS ALWAYS GIVE CODE NO., SERIAL NO., TYPE, R.P.M. AND VOLTAGE ON NAME PLATE

PART LIST ASSEMBLY
D-400 MACHINE
JKS 1-31-19
D-400

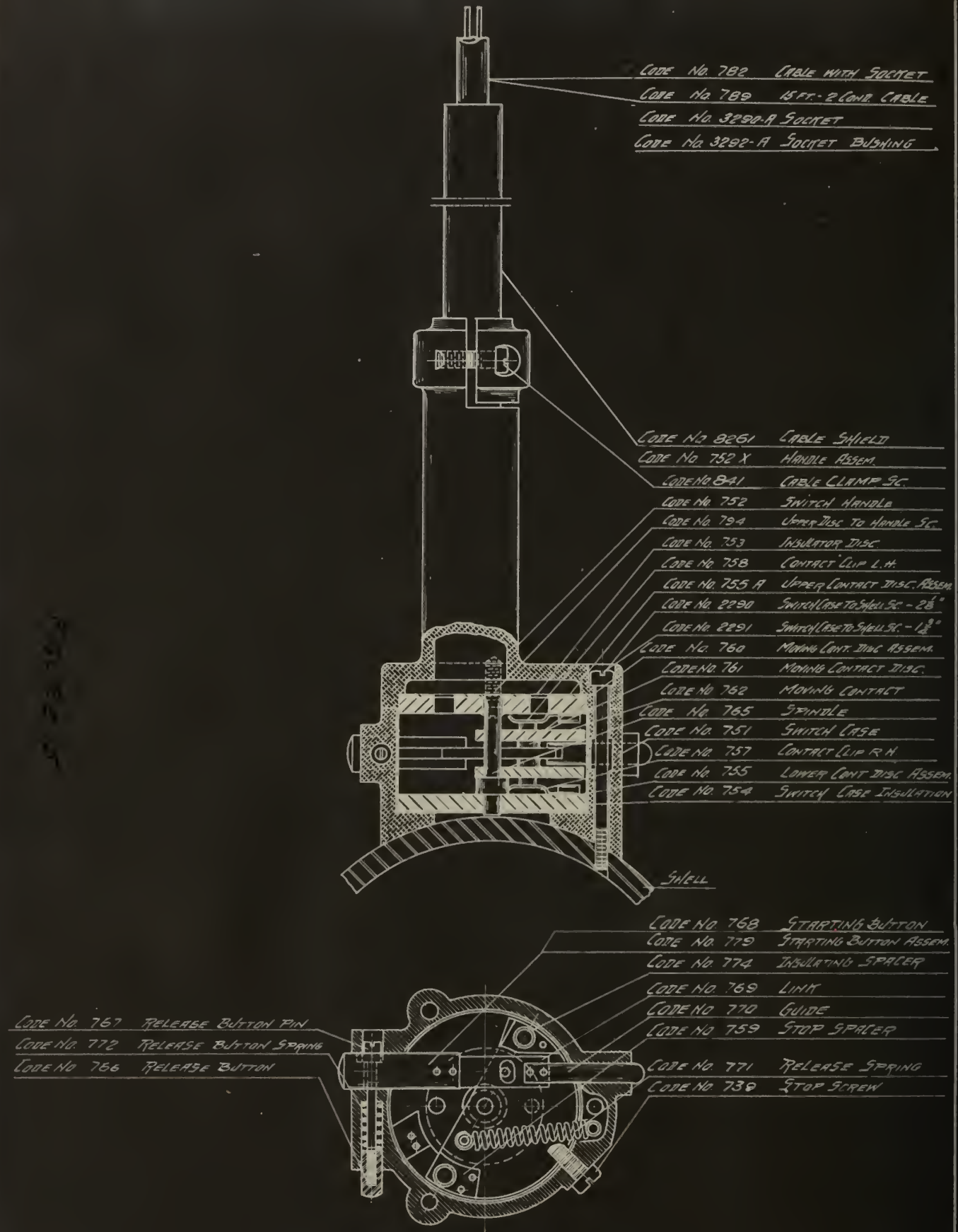

Parts List for 750 Switch

4-10-20

750

051

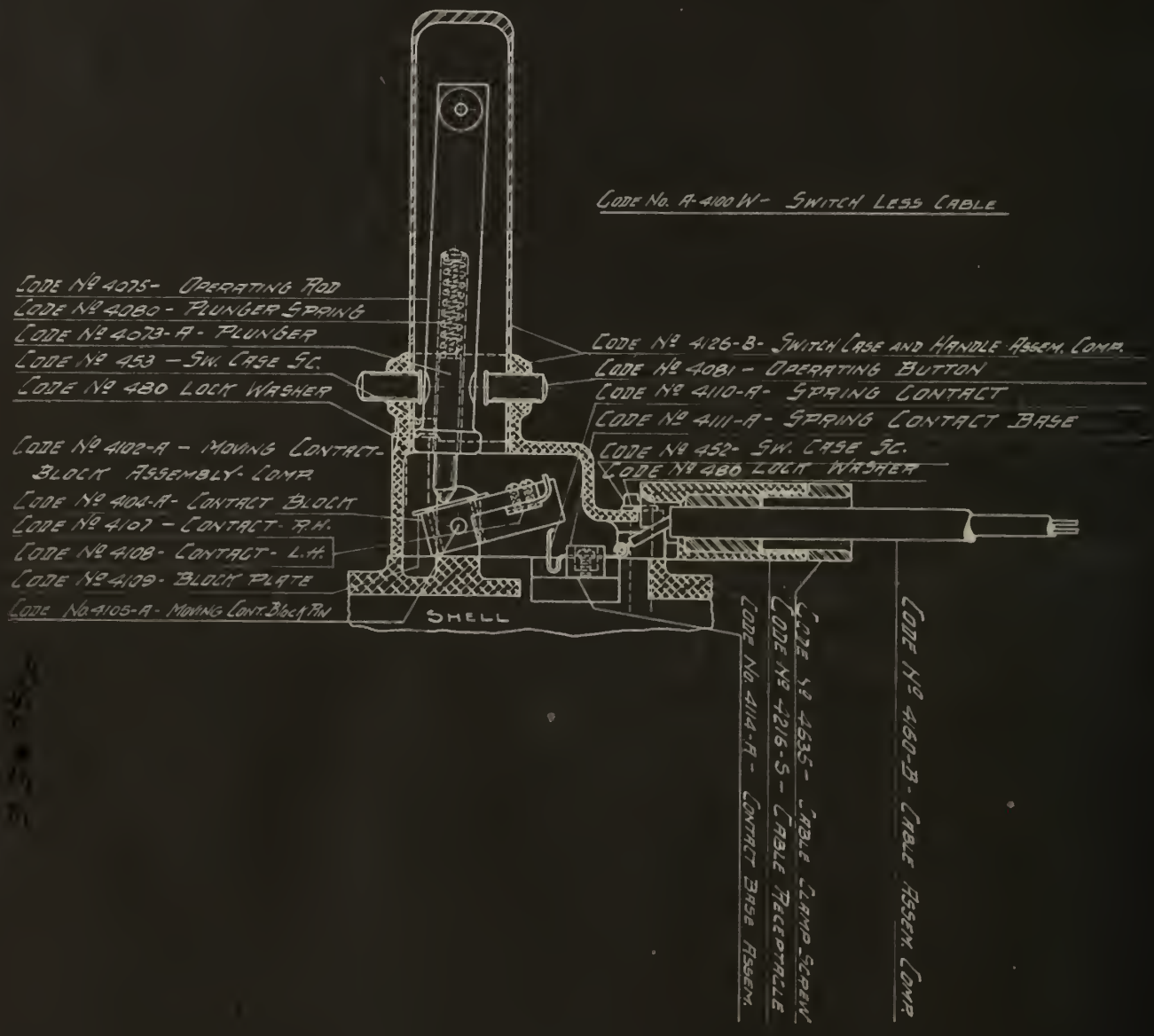

NONE

SWITCH AND RECEPTACLE ASSEMBLY

11-13-19

A-4100

CODE Nº 4205 - ACTUATING SPRING STRAP
CODE Nº 4225 - ACTUATING SPRING
CODE Nº 4218 - TOGGLE STRAP
CODE Nº 4206 - OPERATING ROD ASSEM.

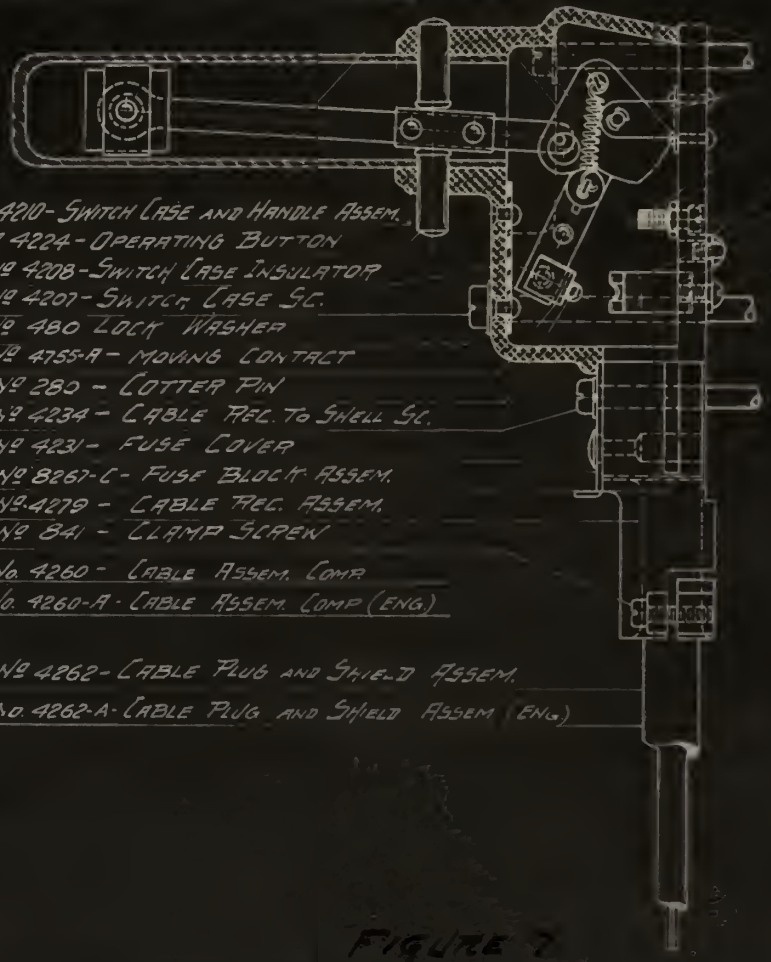

CODE Nº 4210 - SWITCH CASE AND HANDLE ASSEM.
CODE Nº 4224 - OPERATING BUTTON
CODE Nº 4208 - SWITCH CASE INSULATOR
CODE Nº 4207 - SWITCH CASE SC.
CODE Nº 480 LOCK WASHER
CODE Nº 4755-A - MOVING CONTACT
CODE Nº 280 - COTTER PIN
CODE Nº 4234 - CABLE REC. TO SHELL SC.
CODE Nº 4231 - FUSE COVER
CODE Nº 8267-C - FUSE BLOCK ASSEM.
CODE Nº 4279 - CABLE REC. ASSEM.
CODE Nº 841 - CLAMP SCREW
CODE No. 4260 - CABLE ASSEM. COMP.
CODE No. 4260-A - CABLE ASSEM. COMP (ENG.)

CODE Nº 4262 - CABLE PLUG AND SHIELD ASSEM.
CODE No. 4262-A - CABLE PLUG AND SHIELD ASSEM (ENG.)

CODE Nº 4538 - SWITCH CASE SC.
CODE Nº 480 - LOCK WASHER
CODE Nº 4204 - SWITCH BASE ASSEM.
CODE Nº 4211 - SWITCH BASE
CODE Nº 4203 - CONTACT ARM SUPPORT
CODE Nº 336 - STOP SCREW
CODE Nº 42 - STOP SCREW NUT
CODE Nº 4209 - CONNECTOR CLIP
CODE Nº 4789 - CONTACT CLIP ASSEM.
CODE Nº 4784 - CONTACT CLIP NUT
CODE Nº 4230 - CONTACT CLIP SC.

CODE No 4200 N - SWITCH LESS CABLE

THIS SWITCH CAN BE REPLACED BY
B-4200 SWITCH WITH ADAPTER CODE No. 4211-T

FIGURE 7

NONE 11-12-19
SWITCH AND RECEPTACLE ASSEM.

4200

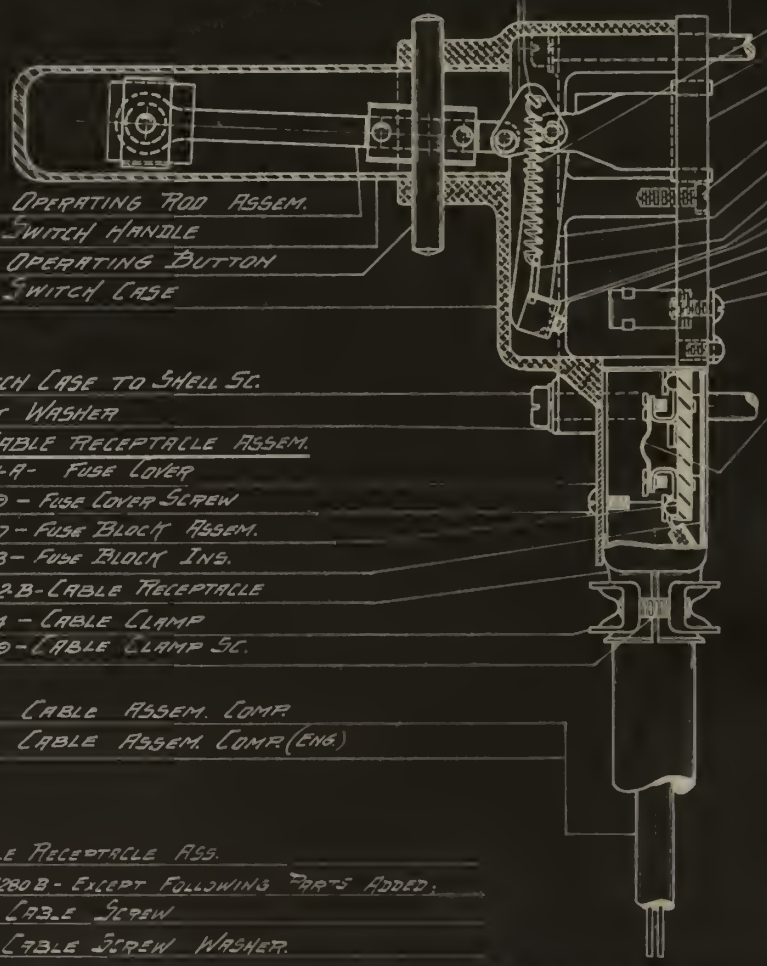

Code No. 425 - Switch Case To Shell Sc.
Code No. 4218-A - Toggle Strap
Code No. 4205-A - Rear Actu. Spring Strap
Code No. 4225-A - Actuating Spring
Code No. 4203-A - Contact Arm Support
Code No. 4211-A - Switch Base
Code No. 339 - Base To Case Sc.
Code No. 4215-A - Contact Arm.
Code No. 4213 - Front Actu. Spring Strap
Code No. 4755-A - Moving Contact
Code No. 280 - Cotter Pin
Code No. 4789 - Contact Clip Assem.
Code No. 4209 - Connector Clip
Code No. 4230 - Conn. Clip Sc.
Code No. 8268 - Fuse - All Amperes

Code No. 4206-B - Operating Rod Assem.
Code No. 4078 - Switch Handle
Code No. 4224-A - Operating Button
Code No. 4201-A - Switch Case

Code No. 4210-A - Switch Case And Handle Assembly - Furnished As One Unit -

Code No. 425 - Switch Case To Shell Sc.
Code No. 480 - Lock Washer
Code No. 4280-B - Cable Receptacle Assem.
Code No. 4231-A - Fuse Cover
Code No. 2299 - Fuse Cover Screw
Code No. 4267 - Fuse Block Assem.
Code No. 4273 - Fuse Block Ins.
Code No. 4272-B - Cable Receptacle
Code No. 4274 - Cable Clamp
Code No. 3029 - Cable Clamp Sc.

Code No. 4260-B - Cable Assem. Comp.
Code No. 4260-C - Cable Assem. Comp. (Eng.)

Code No. A 4200 W - Switch Less Cable

This Switch Can Be Replaced By B-4200 Switch.

Code No. 4280-C - Cable Receptacle Ass.
Same As Code No. 4280 B - Except Following Parts Added:
Code No. 5077 - Cable Screw
Code No. 670 - Cable Screw Washer.

Name 11-12-19
Switch and Receptacle Assem.
C.W.W. A-4200

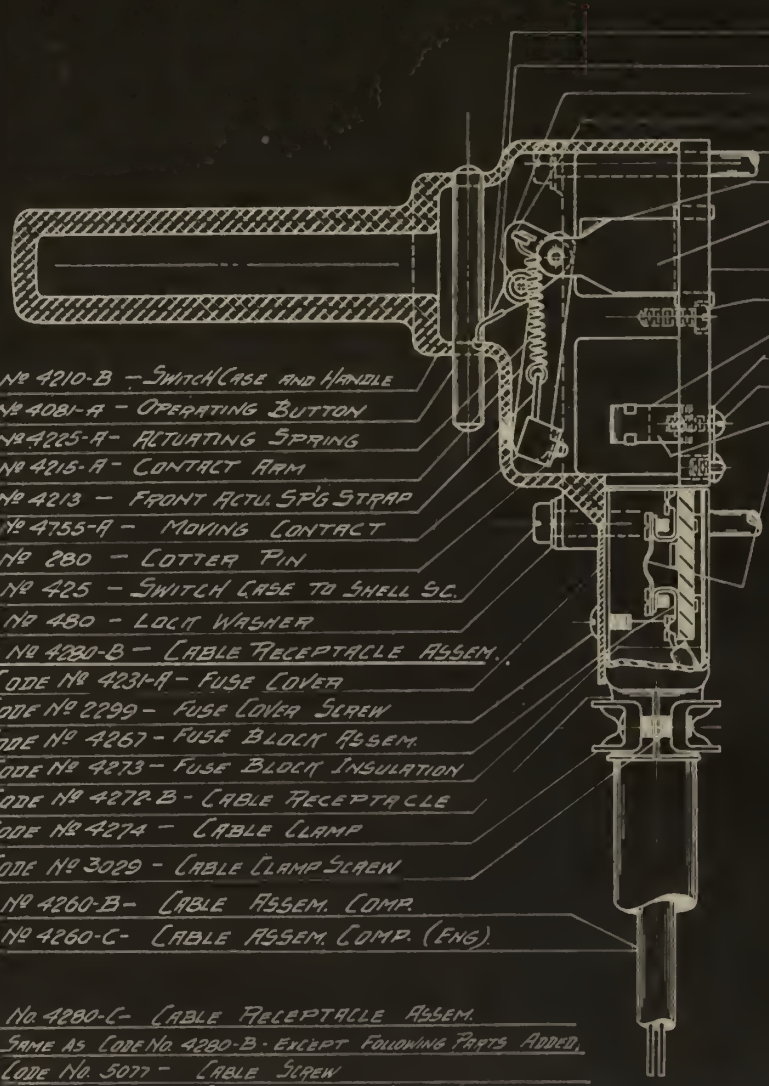

Code No 4285 - Conn. Link
Code No 4086 - Ins. Bushing
Code No 4218 - Toggle Strap
Code No 4205-A - Rear Actu. Spring Strap
Code No 425 - Switch Case to Shell Screw
Code No 4203-A - Contact Arm Support
Code No. 4284-A - Switch Mech. Assem.
Code No 4211-A - Switch Base
Code No 4079 - Base to Case Sc.
Code No 4789 - Contact Clip Assem.
Code No 4209 - Connector Clip
Code No 4230 - Conn. Clip Screw
Code No. 4222 - Contact Arm Stop
Code No. 8268 - Fuse - All Amperes

Code No. B 4200 W - Switch less Cable

Code No 4210-B - Switch Case and Handle
Code No 4081-A - Operating Button
Code No 4225-A - Actuating Spring
Code No 4215-A - Contact Arm
Code No 4213 - Front Actu. Spg Strap
Code No 4755-A - Moving Contact
Code No 280 - Cotter Pin
Code No 425 - Switch Case to Shell Sc.
Code No 480 - Lock Washer
Code No 4280-B - Cable Receptacle Assem.
Code No 4231-A - Fuse Cover
Code No 2299 - Fuse Cover Screw
Code No 4267 - Fuse Block Assem.
Code No 4273 - Fuse Block Insulation
Code No 4272-B - Cable Receptacle
Code No 4274 - Cable Clamp
Code No 3029 - Cable Clamp Screw
Code No 4260-B - Cable Assem. Comp.
Code No 4260-C - Cable Assem. Comp. (Eng)

Code No. 4280-C - Cable Receptacle Assem.
Same as Code No. 4280-B - Except Following Parts Added.
Code No. 5077 - Cable Screw
Code No. 670 - Cable Screw Washer

FIGURE 1

None 11-12-19
Switch and Receptacle Assembly
C.W.W. B-4200

CHAPTER II.

BASIC REQUIREMENTS.

1. POWER AND SPEED.

The characteristics of the 1/2 inch universal drill have been based on the requirements of a 1/2 inch carbon steel drill in .20 to .30 carbon steel with a feed pressure sufficient to drill at the rate of at least 1-1/8 inches per minute. The speed of the machine under load should be between 300 and 400 RPM, which represents a maximum cutting speed of about 50 feet per minute. On a conservative basis of 1 HP per cubic inch of metal removed per minute the power available at this speed should be about .22 HP.

2. MECHANICAL FEATURES.

The drill may have a straight shank or a No. 1 Morse taper. The 1/2 inch machine is usually equipped with a chuck for straight shank drills, as this gives a tool of greater all around usefullness, which is after all the strongest argument for the universal electric drill. The speed of the chuck being too low for direct connection to a motor, the chuck spindle is driven through a train of gears with a ratio of 15 or 20 to 1. A thrust bearing must always be provided on the chuck spindle.

The nature of the machine demands that we obtain the maximum strength for a given weight of material. In the gearing stub teeth and case hardened nickel steel have been adopted in the best designs with such excellent results that gear breakage is almost unknown. Aluminum is used when permissible, but it has been found to be bad practice to mount a ball bearing in aluminum when the outer race is free to creep. In such cases the aluminum should be bushed with steel.

The very high speed at which the motor runs demands the very best of workmanship and liberal bearings to eliminate trouble from vibration. Ball bearings have proven most satisfactory on the high speed members, but where space prohibits the use of a liberally rated ball bearing a plain bearing is preferable on the slow speed elements.

3. ELECTRICAL FEATURES.

In order to reduce the weight of the motor, and because the universal motor inherently demands it, the armature speed is very high. The high frequency vibration attendant to such speed is the greatest enemy to long life in the universal motor. They must be wound with very fine wire which shows a tendency to crystallize at the leads behind the commutator. Best results have been obtained with an armature with individually taped coils placed in semi-open slots. Enameled wire has not been found satisfactory. Space demands either double silk or something similarly compact and efficient in insulating properties.

A special grade of high resistance brush has been developed for the universal motor, in fact the universal motor depends a great deal upon this brush for tolerable commutation. The relative strength of armature and field and the brush displacement which give desired performance on alternating current are contrary to the relations required for perfect commutation. The practice of undercutting the commutator mica is condemned by the experience of most manufacturers of portable tools. Carbon and metallic dust collect between the bars, causing shorts and burn-outs. A hard brush and the use of soft amber mica insulation gives freedom from high mica and its attendant troubles without resorting to undercutting.

The switch and cable connection must be given some consideration, as they are a very annoying source of trouble on many tools. The switch must be capable of breaking the circuit under a current equal to the stalling amperes of the motor. The safety codes in England require fuses on the machine. This leads to the development of the fused terminal box as shown in Chapter I. The cable must be re-placed occasionally, and it is a great convenience if this can be done without disturbing any soldered connections. The protective value of the fuses depends upon their being of proper capacity, and as the natural tendency is to replace them with over-size fuses or copper wire their use is being abandoned in this country.

4. ADAPTABILITY.

The portable tool is used in many places where the diameter of the motor would be a disadvantage if the spindle were centrally located. This has lead to the almost universal adoption

of the offset spindle. Since the feed pressure necessary to feed a 1/2 inch drill in metal is considerably more than a man can exert, a machine of this size should have provision for the attachment of a feed screw in line with the spindle. This is usually interchangeable with a spade handle.

On a line through the centers of the spindle and armature, side handles should be provided, on one of which should be the button or trigger of the switch. The so-called "dead handle" on the spindle side should be detachable for work in corners. The competition of the air tool and general practice to-day dictate that the 1/2 inch universal tool must weigh less than 25 pounds.

5. ACCESSIBILITY.

Any motor with a commutator and brushes requires occasional inspection to clean the commutator and renew the brushes. Brushes should be carefully sanded to fit the face of the commutator, and this cannot be done unless they are accessible in their normal position. This requirement condemns the practice of mounting the brush holder in the top head of the machine.

It is also a great advantage to so construct the gear housing and lower head that the gears and armature are quickly accessible without removing keys or disturbing press fits. The latter procedure may be the ruin of a machine in the hands of an unskilled person, and at best a press fit is never perfect after having been disturbed. The fan is usually of aluminum, which should not be assembled with a press fit for the above reason.

The points of lubrication should be few and readily accessible. Grease lubrication should be used, and two points of application can be accomplished with the proper design.

The removable armature pinion is a great advantage in accessibility, as it permits the clamping of the lower armature bearing to the shaft in the simplest and most accessible manner.

CHAPTER III

THEORY OF THE UNIVERSAL MOTOR

1. FUNDAMENTAL THEORY

The design of a direct current series motor would involve the following fundamental considerations: First, the design of the armature with the power requirements in mind. Secondly, the design of the field magnetic circuit to carry the flux required. Third, the determination of the air gap to give the relation between field and armature turns dictated by the conditions for good commutation. The armature ampere turns per pole are usually less than the field ampere turns per pole and seldom exceed this figure in well designed machines.

When we desire to operate this machine on alternating current we must reconsider these fundamental requirements in the light of the new conditions imposed. Our aim is to make the performance on alternating current approximate the performance on direct current. It is at once apparent that we must laminate the magnetic circuit to prevent destructive heating from core loss and that the reactance of the windings must be as low as possible to give a tolerable power factor. The effect of the reactive components may be studied in the vector diagram Fig. 10.

2. THE FIELD.

In a given field winding the field produced by alternating current is equal in effectiveness to that produced by direct current. The counter e.m.f. generated in the armature will be:

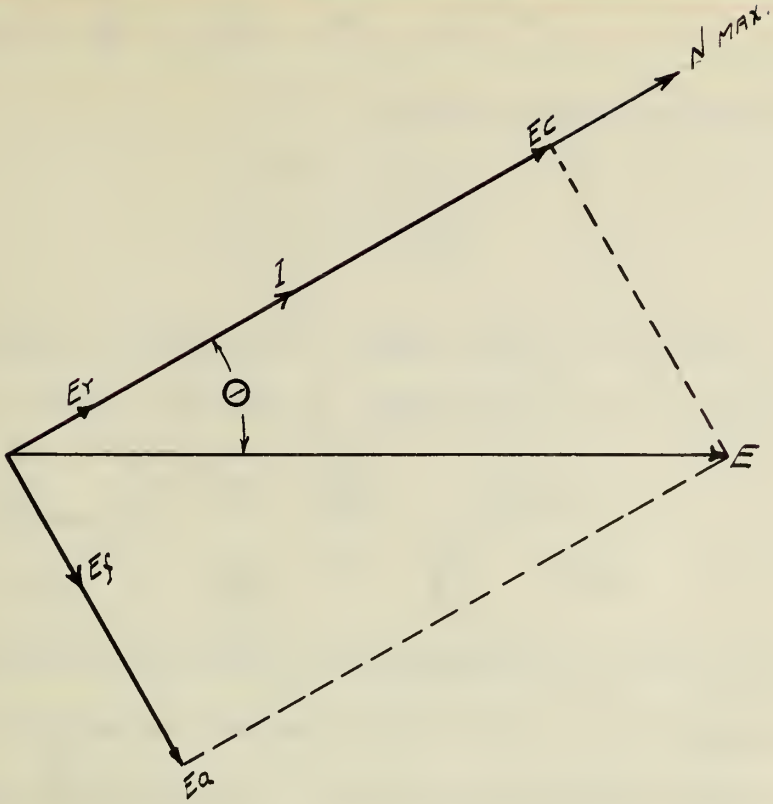

E = impressed e. m. f.

E_c = counter e. m. f.

E_f = induced e. m. f. in field

E_a = induced e. m. f. in armature

E_r = IY drop in field and armature

I = current

Θ = angle of lag

N_{MAX} = flux

VECTOR DIAGRAM OF SERIES ALTERNATING CURRENT MOTOR

FIGURE 10.

$$E_c = Z \cdot \frac{n}{60} \cdot N \cdot 10^{-8}$$

Z = series turns on armature

N = lines

n = r.p.m.

On alternating current of the same effective value, or a maximum value of $i\sqrt{2}$, the e.m.f. generated in the armature will be:

$$E_{c\,max} = Z \cdot \frac{n}{60} \cdot N_{max} \cdot 10^{-8}$$

$$E_c = \frac{1}{\sqrt{2}} \cdot Z \cdot \frac{n}{60} \cdot N_{max} \cdot 10^{-8}$$

The only reason for making a distinction is that it is customary to use the maximum value of the flux in alternating current calculations; $\frac{1}{\sqrt{2}} N_{max}$ gives the same effective value as represented by N on direct current.

One of the important considerations is the type of field; whether to be built with distributed or concentrated winding. The counter e.m.f. and consequently the speed of the armature is independent of the distribution of the field flux, only the total number of lines need be considered and we are interested in using the form of field winding which will give the lowest reactance and consequently the highest power factor. The ideal extremes may be represented by Fig. 11, the completely distributed winding and Figure 12, the concentrated winding.

The flux distribution within the concentrated coil will be uniform whereas with the flat coil winding the turns become less and less effective as their span decreases with the result that in order to obtain a total flux equal to that of the concentrated field, the peak of the flux distribution and therefore the turns surrounding the center of the pole must be double that

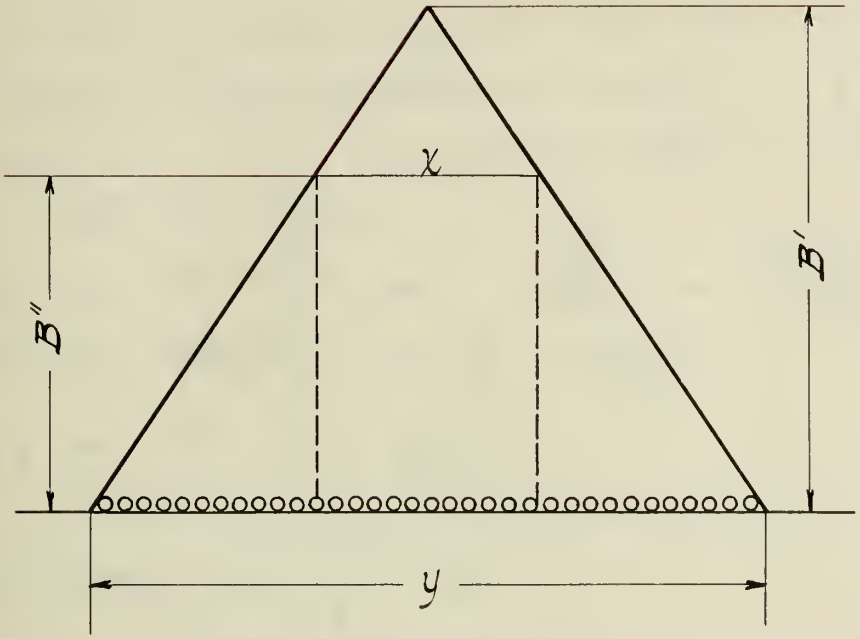

DISTRIBUTED WINDING

FIG. 11

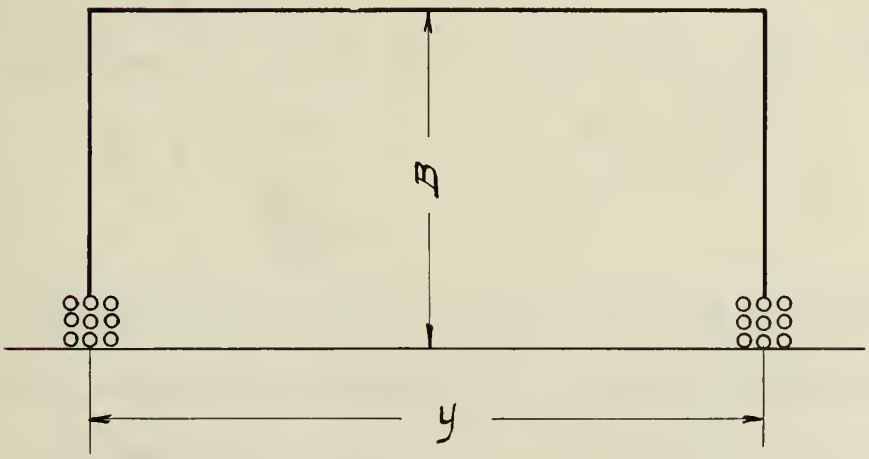

CONCENTRATED WINDING

FIG. 12

of the concentrated winding.

The e.m.f. induced in the distributed winding will be the sum of the e.m.f.'s in the individual turns which will vary with the amount of flux surrounded by the turn. In a turn of span X this e.m.f. will be proportional to $\mathcal{B}''x + \frac{\mathcal{B}' - \mathcal{B}''}{2} x$

$$\mathcal{B}'' = \mathcal{B}' \frac{y-x}{y}$$

$$E_x \propto \mathcal{B}' \frac{y-x}{y} x + \frac{\mathcal{B}'}{2} x - \frac{\mathcal{B}'(y-x)x}{2y}$$

$$E_x \propto \mathcal{B}' x \left(\frac{y-x}{y} + \frac{1}{2} - \frac{y-x}{2y} \right)$$

$$E_x \propto \mathcal{B}' x \left(1 - \frac{x}{2y} \right)$$

To get the average e.m.f. per turn:

$$E' = \frac{\mathcal{B}'}{y} \int_0^y \left(x - \frac{x^2}{2y} \right) dx$$

$$= \frac{\mathcal{B}'}{y} \left[\frac{x^2}{2} - \frac{x^3}{6y} \right]_0^y$$

$$= \frac{\mathcal{B}'}{y} \cdot \frac{3y^3 - y^3}{6y}$$

$$E' = \frac{1}{3} \mathcal{B}' \cdot y$$

For the concentrated winding the average e.m.f. per turn would be:

$$E = \mathcal{B} \cdot y \qquad \mathcal{B} = \frac{\mathcal{B}'}{2}$$

$$E = \frac{\mathcal{B}' y}{2}$$

We have shown that the turns required with the distributed winding are twice those required with the concentrated winding from which we derive the conclusion that the induced e.m.f. for the two types compare as follows:

$$E \text{ induced in distributed winding} = \frac{2}{3} \mathcal{B}' y$$

$$E \text{ induced in concentrated winding} = \frac{1}{2} \mathcal{B}' y$$

$$\text{Ratio } \frac{\text{E distributed}}{\text{E concentrated}} = 1.33$$

Our conclusion is, therefore, that a concentrated winding gives the lowest reactance, the maximum advantage over the theoretical case of a flat winding being 25%.

3. THE ARMATURE

Having decided thus far in favor of the concentrated field winding it behooves us to consider the effect of the armature on the problem of field design. In order to get our field with as few turns as practicable the air gap will be made as small as mechanical considerations will permit. On good bearings this may be as small as .010" although .015" is the more common figure for motors of the size under consideration. A weak field and a small air gap are in direct current practice contrary to the design standards for a good motor. The armature tends to distort the field by setting up a flux at right angles to the main flux and on alternating current induces an e.m.f. in the armature; in other words is responsible for the reactance of the armature

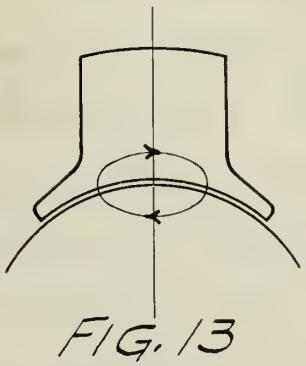

FIG. 13

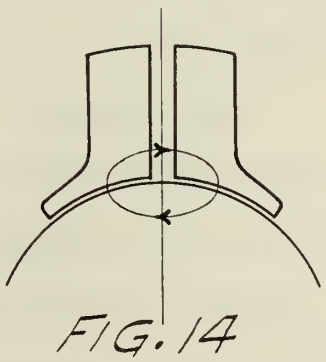

FIG. 14

The path of the armature flux is across the air gap and the face of the pole substantially as indicated in Fig. 13. The self induced armature e.m.f. will be:

$$E_a = \sqrt{2}\ \pi \cdot Z \cdot f \cdot N'_{max} \cdot 10^{-8}$$

The flux N_{max} is determined by the reluctance of the path indicated in Fig. 13. The air gap is the principal reluctance and in our case we are reducing this to a minimum to reduce field reactance. It is therefore apparent that we are apt to lose all we gain unless the reluctance of this path can be increased or the flux eliminated by the use of a compensating field winding. The latter system is not justified in a small motor when there is a much simpler method of obtaining satisfactory conditions. The splitting of the pole as in Fig. 14, will cut this flux practically in half.

The e.m.f. induced in the field winding will be:

$$E_f = \sqrt{2}\ \pi \cdot Z_f \cdot f \cdot N_{max} \cdot 10^{-8}$$

Z_f = field turns

f = frequency

N_{max} = flux per pole passing thru arm.

In order that the motor may have a good power factor and something like equal performance on AC and DC the sum of E_a and E_f must be small as compared with the e.m.f. in phase with the current. Tangent $\Theta = \frac{E_a + E_f}{E_c + E_r}$ See Fig. 10.

To combine E_a and E_f we may substitute two constants: Let C_1 represent the ratio of the reluctance of the armature magnetic circuit to that of the field magnetic circuit. Let C_2 represent the ratio of armature turns to field turns. Then combining the two expressions for E_a and E_f we obtain:

$$E_a + E_f = \sqrt{2} \cdot \pi \cdot f \cdot 10^{-8} \left[Z_f \cdot N_{max} \cdot \frac{C_2}{C_1} + Z_f \cdot N_{max} \right]$$

$$= \sqrt{2} \cdot \pi \cdot f \cdot 10^{-8} N_{max} Z_f \left[1 + \frac{C_2}{C_1} \right]$$

$$E_c = \frac{1}{\sqrt{2}} \cdot C_2 Z_f \cdot \frac{n}{60} \cdot N_{max} \cdot 10^{-8}$$

The tangent of the angle Θ must be a minimum to meet the requirements of a good motor.

$$\tan \Theta = \frac{E_a + E_f}{E_c}$$

$$= \frac{\sqrt{2}\, \pi \cdot f \left[1 + \frac{C_2}{C_1} \right]}{\frac{1}{\sqrt{2}} \cdot C_2 \cdot \frac{n}{60}}$$

$$= K \cdot \frac{f}{n} \cdot \left(\frac{C_1 + C_2}{C_1 C_2} \right)$$

From this expression we deduce the following limitations: First, the speed must be high in comparison with the frequency; in other words the normal speed should bear the greatest possible ratio to the synchronous speed. Secondly, the quotient $\frac{C_1 + C_2}{C_1 C_2}$ must be reduced to a minimum which demands the highest possible reluctance in the path of the armature flux and the greatest possible ratio between armature and field turns.

4. COMMUTATION

As stated by Burke in his patent, the point of commutation has an important bearing on the performance of the universal motor. However, in a salient pole motor the angle of displacement will not be as great as 50 to 58 degrees. This displacement has the effect of reducing the armature reaction

by neutralizing the component of the armature flux in line with the main flux. It is possible to obtain as good commutation with the design of field I have outlined as can be obtained with the Burke motor. The results of the design hereafter described prove this point for machines not exceeding this one in capacity.

The problems in commutation may all be reduced to consideration of the limits set by commercial carbon brushes. There is a definite limit to the e.m.f. that can be short circuited without getting a short circuit current sufficient to arc and burn the brush and the commutator. It is apparent that the resistance of the brush and contact in the path of the short circuit e.m.f. is the limit imposed. Increasing the resistance of the brush cannot be resorted to without caution for the capacity of the brush must be sufficient to handle the load current without heating. Some progress is being made with brushes having a tangential resistance far in excess of the radial resistance.

The short circuit e.m.f. on direct current is produced by the rotation of the short circuited coil in the field at the point of commutation. On alternating current a second e.m.f. is produced in the shorted coil by the alternations of the field. This e.m.f. is usually far greater than the e.m.f. of rotation and, of course, 90° off in phase relation. The e.m.f. of rotation can be neutralized by a series commutating pole. The use of the neutralizing winding on alternating current series motors has been found of some value in large machines but the complication and cost are prohibitive

in a very small machine. This winding must be equal to the armature winding and adds considerably to the field reactance.

CHAPTER IV

MOTOR DESIGN

1. CALCULATIONS

With the requirements given in Chapter II as a basis we should design with the aim of getting a liberal amount of power in excess of the minimum .22 HP. The more we can obtain in a machine of about the same weight as prevailing models the more will be the advantage over competitors. It would be well to analyze the fundamental dimensions of some prevailing models.

Case I. ½" Duntley Universal Drill, Type 1BSS, Spec. A-4208 S 1 386 Motor manufactured by Burke Electric Co.

Diameter of armature, 2-1/16"

Length of armature , 2"

Number of slots , 11

Case II. ½" Van Dorn Universal, licensed under the Burke patent, Code E-400, Type DA1.

Diameter of armature, 2¼"

Length of armature , 2-1/16"

Number of slots , 15

Practical considerations dictate the use of the same armature punching now being used in the motor described in Case II. Both the above motors have distributed field windings 12 and 16 slots respectively. Figure 15 gives the design of the armature punching to be used. The slots are very nearly open to permit winding with

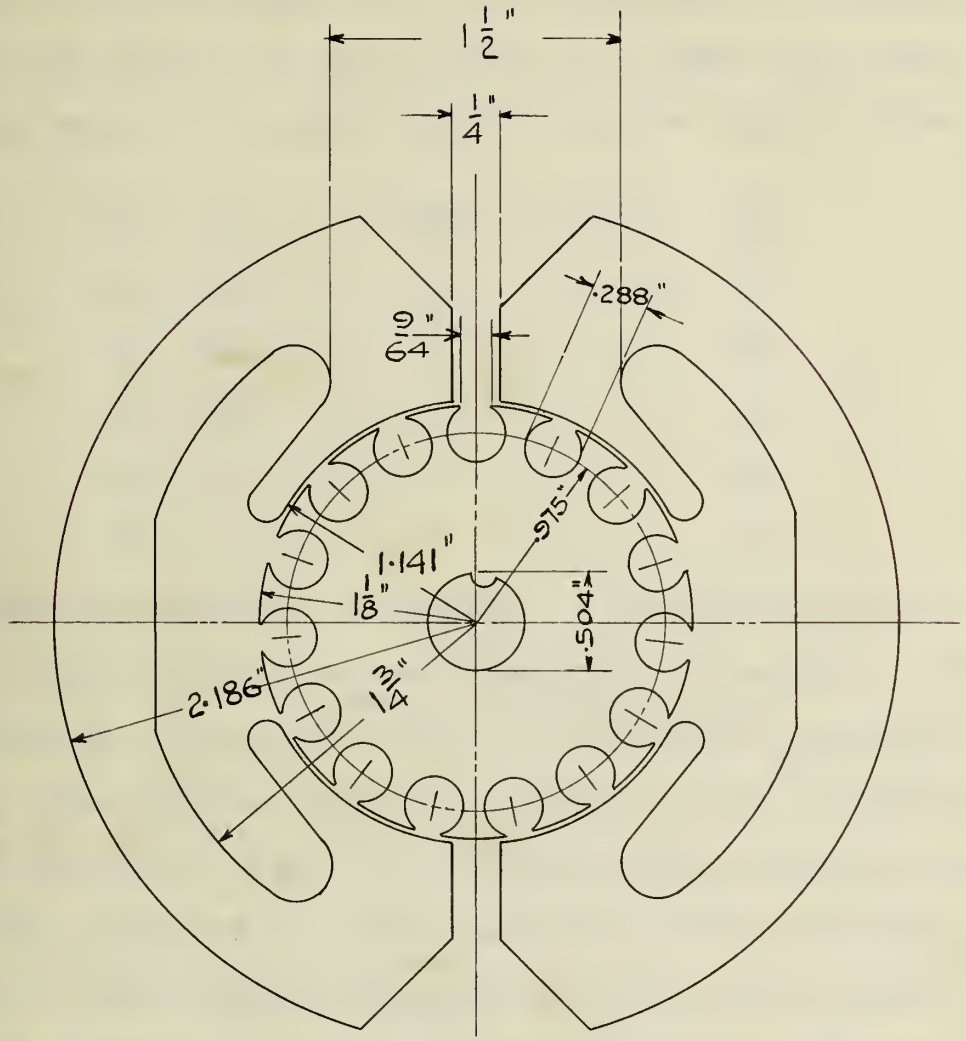

FIG. 15

completely taped coils. The capacity of these slots has been found to be as follows with slot insulation two thicknesses of .007" fish paper and coils taped with .0025" silk tape half lapped; wire to be double silk or treated single cotton covered.

No. 25	Wires per slot	60
No. 24	" " "	48
No. 23	" " "	38
No. 22	" " "	30
No. 21	" " "	24
No. 20	" " "	19

Ninety percent of the demand for universal motors is for use on 110 volts but we must consider the demand for 220 volt machines in deciding the number of commutator segments and coils. The minimum number of segments for this armature would be 15 but on 220 volts the voltage between segments would be too high. The use of double coils and 30 segments will give about 15 volts between segments which is safe practice.

The universal motor is intended for operation from the ordinary lighting circuit and the rated capacity of the fittings on such circuits is 660 watts. This is, therefore, the logical limit to the capacity of such motors. This limit is very ample for half inch drilling with a portable tool; in fact 5/8" work can be done within this limit with a machine of reasonable efficiency. A rating of 550 watts will be assumed. On 110 volts an armature conductor of No. 24 wire should give a cool running machine; circular mils per ampere = 404 ÷ 2.5 = 161. The designer of large motors would consider such a current density

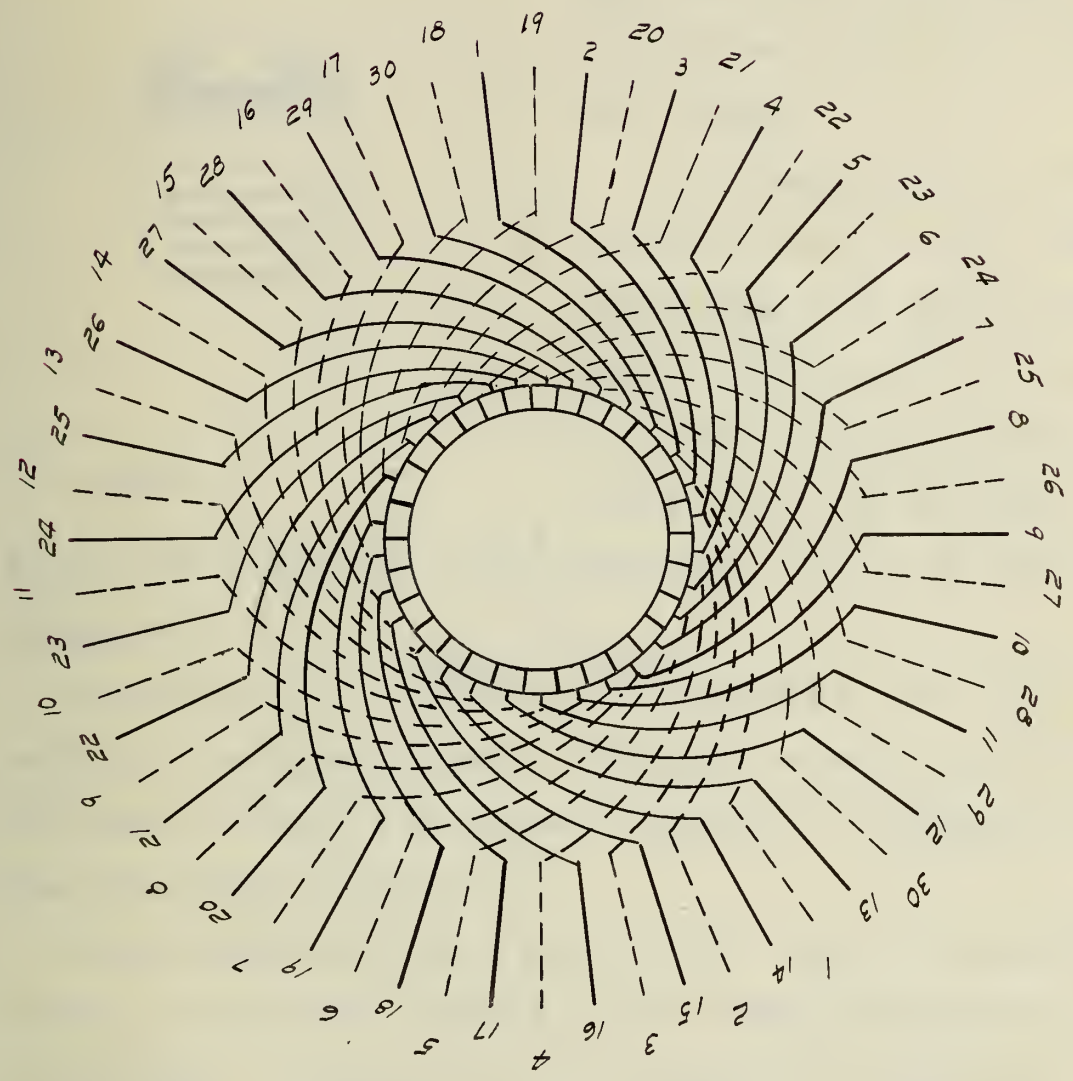
18 1 19 2 20 3 21 4 22 5 23 6 24 7 25 8 26 9 27 10 28 11 29 12 30 13 1 14 2 15 3 16 4 17 5 18 6 19 7 20 8 21 9 22 10 23 11 24 12 25 13 26 14 27 15 28 16 29 17 30

FIGURE 16

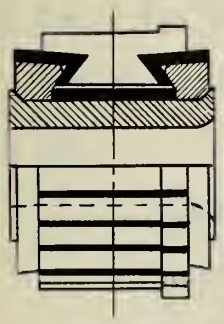

FIGURE 17

entirely too high but experience with this type of machine equipped with their very efficient ventilation proves this to be a conservative figure.

Our armature will, therefore, be wound with 30 coils, each coil consisting of 12 turns of No. 24 wire. The coils will be wound and taped in pairs giving 15 double coils and 48 wires per slot. The connection to the commutator will be as shown in Figure 16.

The limit to the speed of the armature is apt to be the commutator peripheral speed. Practical considerations make it difficult to build a 30 segment commutator of diameter smaller than that shown in Figure 17.

The insulation between bars and the width of segments shown cannot be materially reduced without danger from shorts and overheating. Regardless of the limits set by designers of large machines the peripheral speed of the commutators on this class of motor may be as high as 5500 feet per minute when the motor is running idle. On this basis the speed of this machine at rated load would be about 5500 RPM, with a gear ratio of about 16 to 1 required to give 350 RPM at the chuck.

The field may now be designed

$$E_c = 90 \text{ volts estimated}$$

$$Z = \frac{30 \times 12}{2} = 180$$

$N = 5500$

$$N = 90 \times 180 \times \frac{5500}{60} \times 10^{-8} = 148{,}000$$

This will be a two pole motor. The laminations will be punched from No. 27 U.S. gauge sheet steel with permeability as indicated in Figure 18.

Pole arc = 130°

Teeth per pole = 6

Width 6 teeth = $\left(\frac{2 \times .975}{15} - .288\right)6 = .72"$

Core depth = .975 - .144 - .252 = .58"

Induction in teeth = 110,000 Maximum

Induction in core = 90,000 lines per sq. in.

Space factor for core iron = .9

Length core = $\frac{148{,}000}{110{,}000 \times .72 \times .9} = 2\text{-}1/16"$

Leakage coefficient = 1.2 estimated

Lines in yoke = 148,000 x 1.2 = 178,000

Induction in field yoke = 110,000 Maximum

Minimum thickness yoke = $\frac{178{,}000}{110{,}000 \times .9 \times 2 \times 206} = .436"$

On the basis of these figures the field lamination is designed as shown in Figure 15. The large air gap in the center of the pole serves to interrupt the path of the armature flux and reduce the reaction and self induction as discussed in Chapter III.

Calculation of field turns:

δ' = Effective air gap = $\delta \times \frac{t}{t - 6 b_s}$

(Coefficient to allow for increased reluctance of air gap due to opening of armature slots. See Figure 19.)

EFFECTIVE AIR GAP COEFFICIENT

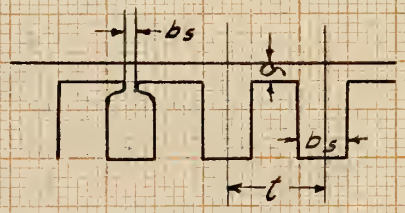

SEMI CLOSED SLOTS

OPEN SLOTS

EFFECTIVE AIR GAP

$$\delta' = \delta \frac{t}{t - 6b_s}$$

EFFECTIVE POLE ARC, b

$$b = b \frac{t - 6b_s}{t}$$

PRODUCT OF COEFFICIENT AND MOUTH OF SLOT GIVES EFF MOUTH

FIGURE-19

1.00
80
.60
6
40
20

2 4 6 8 10 12 14 16 18

$\frac{b_s}{\delta}$

U. OF I. S. S. FORM 3

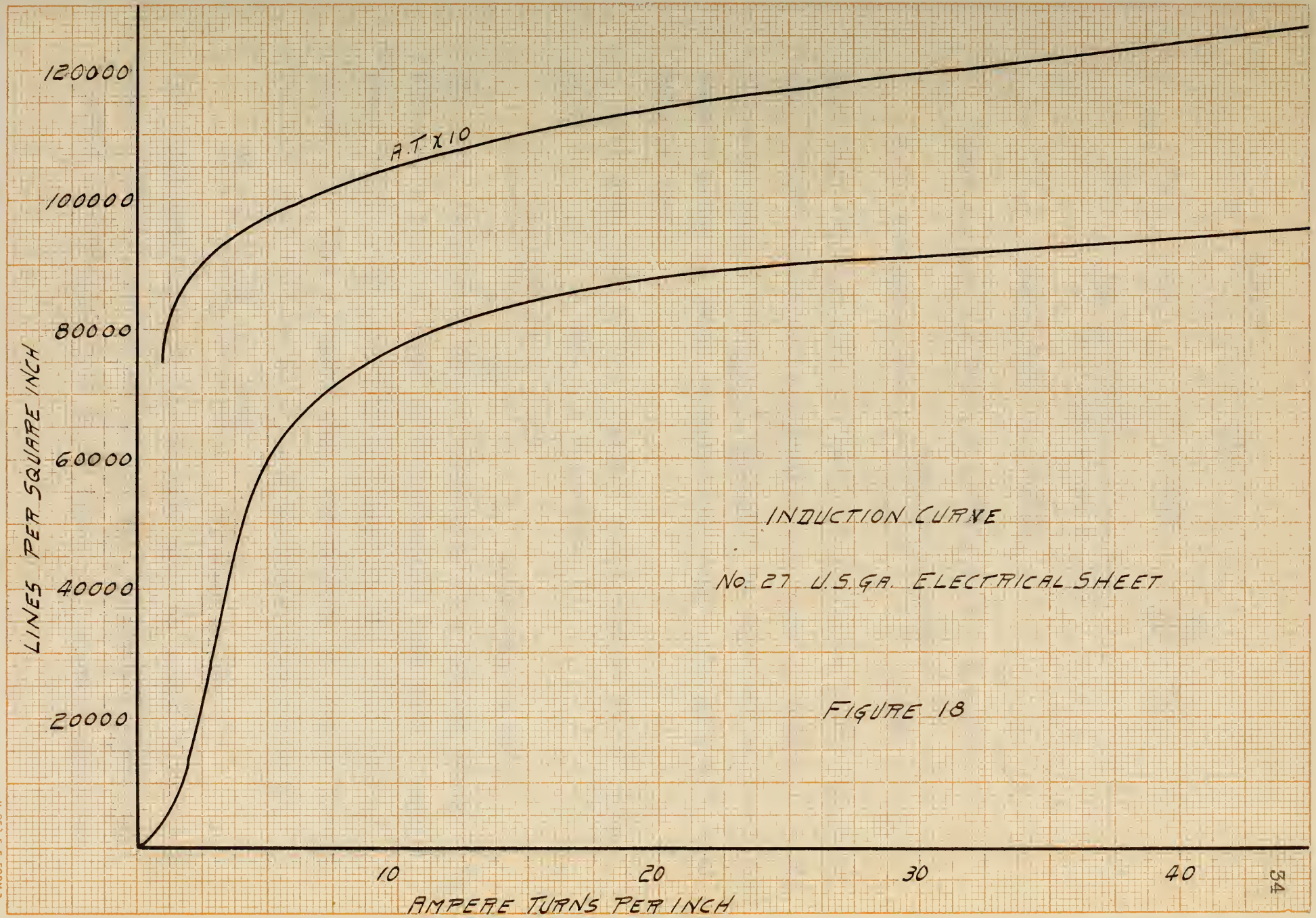

INDUCTION CURVE

No. 27 U.S.GA. ELECTRICAL SHEET

FIGURE 18

U. OF I. S. FORM 2

$$t = \frac{2.25\,\pi}{15} = .471"$$

$b_s = .141"$ $\quad \sigma = .015$ $\quad \frac{b_s}{\sigma} = 9.4$

$$\sigma' = .015 \times \frac{.471}{.471 - .81 \times .141}$$

$$\sigma' = .015 \times 1.32 = .0198"$$

Area air gap = 2.065 x 2.31 = 4.77 sq. inches.

$$\text{A. T. air gap} = .313 \times \frac{148{,}000 \times .0198}{4.77} = 192$$

A.T. iron calculated on the basis of induction curve Figure 18 and 2-1/16" of laminations designed as shown in Figure 15 = 200. The total ampere turns will therefore be about 400 which at five amperes means 80 turns on each field coil. No. 21 D.C.C. wire will be used.

The mean turn of the armature coils will be 10.25" long which will give an armature resistance of

$$\frac{30 \times 12 \times 10.25 \times .0257}{4 \times 12} = 1.98 \text{ ohms at } 25^{\circ}\text{C.}$$

The field resistance may be calculated in a similar manner. The field coil will be wound on a rectangular form with a center block 2-1/8" x 7½" and will be placed on the field core by crossing it like a figure eight and folding it back on itself. The mean turn will be 20.25" and the resistance per coil:

$$\frac{40 \times 20.25 \times .0128}{12} = .76 \text{ ohms at } 25^{\circ}\text{ C.}$$

The total resistance of the machine will be 1.98 + 1.52 = 3.5 ohms at 25° C., and at 65° C., it will be about 4 ohms. We assumed a resistance drop of 20 volts at 5 amperes which is

here shown to be about correct. There will be an additional drop of about 2 volts in the brush contacts.

2. BRUSH HOLDER AND BRUSHES

The brushes must have a rather high resistance. At rated amperes we can assume a density of 40 amperes per square inch which gives a brush section of 1/8 square inch. Making the thickness of the brush $\frac{1}{4}$" to span 2 commutator bars we arrive at a width of $\frac{1}{2}$". The brush holder should hold the brush at an angle of about 5° against rotation to prevent any tendency to chatter and in this class of service the brush pressure should be about four pounds per square inch.

3. THE SWITCH

The switch shown in Figure 8 was simplified by omitting the operating rod and substituting a one piece switch case and handle, Figure 9. This improved construction has given a more rugged switch and handle at reduced cost. It may seem that this switch is quite expensive to build but experience has shown that to break the circuit under the maximum current drawn by the motor nothing but a large wiping contact with very snappy action will give reasonable life. This design agrees with the principles of construction found necessary in circuit breakers. The fuse box will be omitted in the new design, Figure 20.

CHAPTER V

MECHANICAL DESIGN

1. MOTOR HOUSING, HANDLES, ETC.

The motor housing will be made of aluminum and so constructed as to carry the brush holder. The air holes will be drilled opposite the fan and back of the brush holder. This prevents any dust carried by the forced draft from passing over the commutator. A liberal boss will be provided opposite the switch for screwing in the dead handle.

The top head will be of aluminum bushed with steel in the bearing housing and designed to take either a spade handle or feed screw in line with the center of the chuck.

The end plate or piece between the motor housing and lower head will be made of cast iron to give a more permanent seat for the lower armature bearing; the weight of this piece does not justify the use of aluminum with a steel bearing bushing.

The lower head will be of aluminum and will be provided with three ears for the screws which pass through the end plate to the motor housing. A dowel pin serves to maintain alignment between the lower head and end plate bearings for the compound gear shaft.

2. GEARING.

The armature pinion will be screwed into the end of the armature shaft with a body fit for alignment. For this work the stub tooth with 20 degree angle of obliquity is without question the proper design. According to the Fellows system the pitch of such

gears would be specified as 10/12 pitch, etc. The thickness of this tooth will be the same as for the standard $14\frac{1}{2}^{o}$ tooth of 10 pitch and the addendum, clearance, depth of space and whole depth of tooth will be the same as for the standard $14\frac{1}{2}^{o}$ tooth of 12 pitch. With such design we can obtain a very strong and smooth running pinion with 12 teeth, a great advantage in obtaining a large ratio between gear and pinion.

The gear problem in this machine is in a large part one of choosing the proper material and treatment after laying out the gear according to structural requirements. Workmanship is another important item.

The total ratio of 16 to 1 required must be divided between the armature pinion and compound gear and the compound pinion and spindle gear; about 4 to 1 for each ratio. It is desirable to keep the outline of the lower head within the diameter of the motor housing for several reasons. A layout shows that 43 teeth of 24/26 pitch meshing with the armature pinion and 54 teeth of 20/22 pitch on the spindle gear meshing with a compound pinion of 12 teeth will meet this requirement and give us a ratio of 16 to 1. The material and treatment required to carry the load with these gears can be determined by calculation of the stress obtained after assuming the face desirable from the standpoint of space and other structural requirements. See Figure 20.

Assuming a normal load of .4 HP at 5500 RPM on the armature pinion the working stress in the pinion and compound gear will be as follows:

$$s = \frac{w}{p\ f\ y} \qquad \text{and } w = \frac{HP \times 33000}{v}$$

w = Load transmitted in pounds.

p = Circular pitch

f = Face

y = Factor for different number and forms of teeth. See hand books.

s = Safe working stress of material.

v = Velocity in feet per minute.

$$v = .0417 \times 5500 = 721$$

$$w = \frac{.4 \times 33000}{721} = 18.3 \text{ lbs.}$$

$$s = \frac{18.3}{.1309 \times .375 \times .078} = 4780 \text{ pinion}$$

$$s = \frac{18.3}{.1309 \times .375 \times .126} = 2960 \text{ gear}$$

At a speed of 721 feet per minute these stresses are well within the safe limits for mild steel but the pinion would be the first to fail.

Repeating this calculation for the compound pinion and spindle gear:

$$v = .05\pi \times \frac{5500}{3.58} = 242$$

$$w = \frac{.4 \times 33000}{242} = 54.5 \text{ lbs.}$$

$$s = \frac{54.5}{.157 \times .5625 \times .078} = 7920 \text{ pinion}$$

$$s = \frac{54.5}{.157 \times .5625 \times .132} = 4630 \text{ gear}$$

These stresses are also safe for mild steel but in the pinion

is very close to the usual limit. It has been found advisable to use 3½% nickel .19 carbon steel for both armature and compound pinions. These parts would be case hardened 1/64" deep to test about 80 in the scleroscope. Nickel steel will show a more uniform case and considerably greater strength than carbon steel similarly treated. The compound and spindle gears do not require the tough core for strength but case hardening will increase their wearing qualities. A .19 carbon steel should be used for these parts.

3. BEARINGS

In Figure 20 it will be seen that ball bearings have been used on the armature shaft. The inner race of the lower bearing is clamped by the armature pinion which screws into the shaft. The inner race of the upper bearing is clamped with a screw and washer in the end of the shaft. The dimensions and capacities of these bearings are as follows:

Upper Armature Bearing

No. 300

Outside diameter, 35 m m

Bore, 10 m m

Width, 11 m m

Balls, 9 ¼ inch

Radial load capacity, 100 pounds, at 2000 RPM - the maximum speed at which this bearing is rated by manufacturer..

Lower Armature Bearing

No. 301

Outside diameter, 37 m m

Bore, 12 m m

Width, 12 m m

Balls, 10 $\frac{1}{4}$ inch

Radial load capacity, 110 pounds at 2000 RPM - the maximum speed at which this bearing is rated by the manufacturer

The radial load on these bearings is not over 20% of the rated capacity at normal load but experience has taught that the speed at which they operate in this type of machine necessitates a very generous factor of safety.

The bearings on the compound shaft and spindle are of the plain bronze type. The bearing loads throughout the machine can be analyzed as in Figure 21.

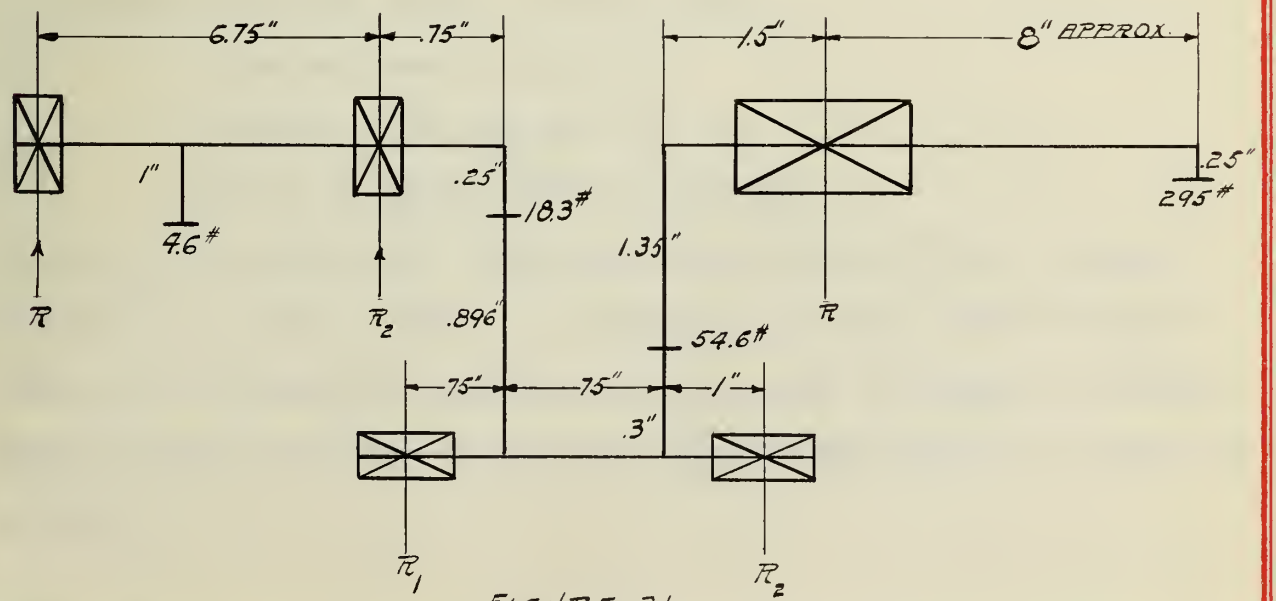

FIGURE-21

The bearing loads are as follows:

Upper Armature Bearing, 1 lb.
Lower Armature Bearing, 22.6 lbs.
Upper Compound Bearing, 34.7 lbs.
Lower Compound Bearing, 38.2 lbs.
Spindle Bearing, 350 lbs.

The rubbing areas, pressures and rubbing velocities are as follows:

Upper Compound Bearing, 7/16" x 11/16" long.
Projected area, .3 sq. in.
Pressure, 86.5 lbs. per sq. in.
Rubbing velocity, 176 ft. per min.

Lower Compound Bearing, 7/16" x 1" long.
Projected area, .438 sq. in.
Pressure, 87 lbs. per sq. in.
Rubbing velocity, 176 ft. per min.

Spindle Bearing 15/16" x 2-1/8" long.
Projected area, 2 sq. in.
Pressure, 175 lbs. per sq. in.
Rubbing velocity, 85 ft. per min.

It will be noticed that with grease lubrication these bearing pressures are very liberal. Experience has shown that it pays well to be liberal in this respect. The use of smaller bearings would shorten the life of the tool with practically no reduction in cost.

The thrust bearing is mounted in the spindle gear in a manner to transmit the load to the end plate. The extent of this thrust pressure is usually not appreciated. To emphasize the importance of the thrust bearing the tool herein described was operated in a drill stand with a feed pressure almost great enough to stall the motor with a ½ inch drill.

Volts	Amperes	Watts	RPM Drill	Feed Pressure
102	8.5	600	50	890 lbs.

It is therefore desirable that the thrust bearing should have a capacity sufficient to eliminate the danger of failure under such abuse. The normal load will be less than half this figure at about 350 RPM. A special thrust bearing with ¼ inch balls is being used which meets these requirements.

4. CHUCKS AND SOCKETS.

Twist drills are built with straight shanks and with Morse taper shanks. This machine could be equipped with a chuck for use with straight shank drills or with a No. 1 Morse taper socket for taper shank drills. The chuck is the preferred equipment. The three jaw chuck shown in Figure 20 has some advantages but there is some doubt as to whether it holds as well as the two jaw chuck. A superficial test was made to ascertain the holding power of three different half inch chucks and the figures are given for what they are worth, not as a conclusive comparison.

Almond ½" three jaw slipped at 30 lbs. feet torque
Standard ½" two jaw slipped at 40 lbs. feet torque
Marvin & Casler twin screw two jaw slipped at 64 lbs feet torque.

The method of attaching the chuck to the spindle of the machine has not been standardized but it is highly desirable that such action be taken as soon as possible. The threaded chuck is most commonly used but has the disadvantage that it is difficult to get a true running chuck with present designs. Each maker has thousands of tools out and probably will not change until a standard is approved by all the portable tool manufacturers.

CHAPTER VI

TESTS

1. MOTOR PERFORMANCE

The motor was designed with an estimated brush displacement of 25° which was verified by test. With the brushes on neutral the performance on A.C. 60 cycles and D.C. was as shown in Figure 22. The perfomance on alternating current is much inferior to that on direct current. The test was repeated with brushes displaced 15°, 30°, 45° and 60°. With the exception of commutation each step up to about 35° improved the characteristics on alternating current. A sparking developed as the displacement was increased but at 30° and less the spark disappeared under load. At 25° displacement the commutation is quite satisfactory at all loads. Figure 27 gives the performance at 5 amperes as a function of the brush displacement and Figure 28 gives the performance of the motor as finally approved.

The alternating current watts have been shown on these performance charts. From Figure 28 we observe that the power factor varies from practically 100% at no load to 90% at 5 amperes and 82% at 7 amperes, which leaves very little to be desired.

2. HEATING AND BRUSH WEAR.

Figure 29 gives the heating characteristics of the motor at rated amperes on alternating current. Ordinarily a 30 minute 55° C. rating is considered ample for portable drill and reamer motors. The brushes of a universal motor usually have a much

shorter life than ordinarily expected in direct current motor practice. This is due to the quality of brush, the high speed and the inevitable presence of some arcing under the brush. Under the worst conditions, that is when running without load, tests have shown the brush wear on this and similar machines to be as high as .002" to .0025" per hour.

3.. DRILLING PERFORMANCE.

A series of drilling tests in 20 to 30 carbon steel produced results as follows:

Size of drill ½". Depth of hole 1½".

Trial	Current	Amps.	Watts.	Seconds	RPM	Feed Pressure	Inches per min.
1	AC	4.3	410	68	380	247	1.32
2	AC	5.3	455	60	300	364	1.5
3	AC	6.4	510	65	230	481	1.38
4	DC	4.9	540	55	360	364	1.64
5	DC	5.8	638	41	315	481	2.2

Of course a tool of this kind will not always be used to drill ½" holes in steel. When smaller drills are used the machine will automatically operate at a higher speed and the rate of drilling will be somewhat greater although the load on the machine will be below normal. This tool will save a great deal of time in wood boring. The capacity in such work depends upon the kind of wood and the depth of hole. For holes not exceeding 4½" in depth this machine will drive a 1" wood bit in poplar, spruce, white pine, cedar, white-wood, red-wood and mahogany; a ¾" wood bit in ash, beech, birch, cherry, chestnut, hemlock, soft maple, oak and

southern pine; and a $\frac{1}{2}$" machine bit in ebony, elm, elder, hickory, hard maple, lignum vitae, walnut, briar, apple and box. For very deep holes the ship auger is used and the size of drill should not exceed $\frac{3}{4}$" and $\frac{1}{2}$" for the two softer groups of wood mentioned above.

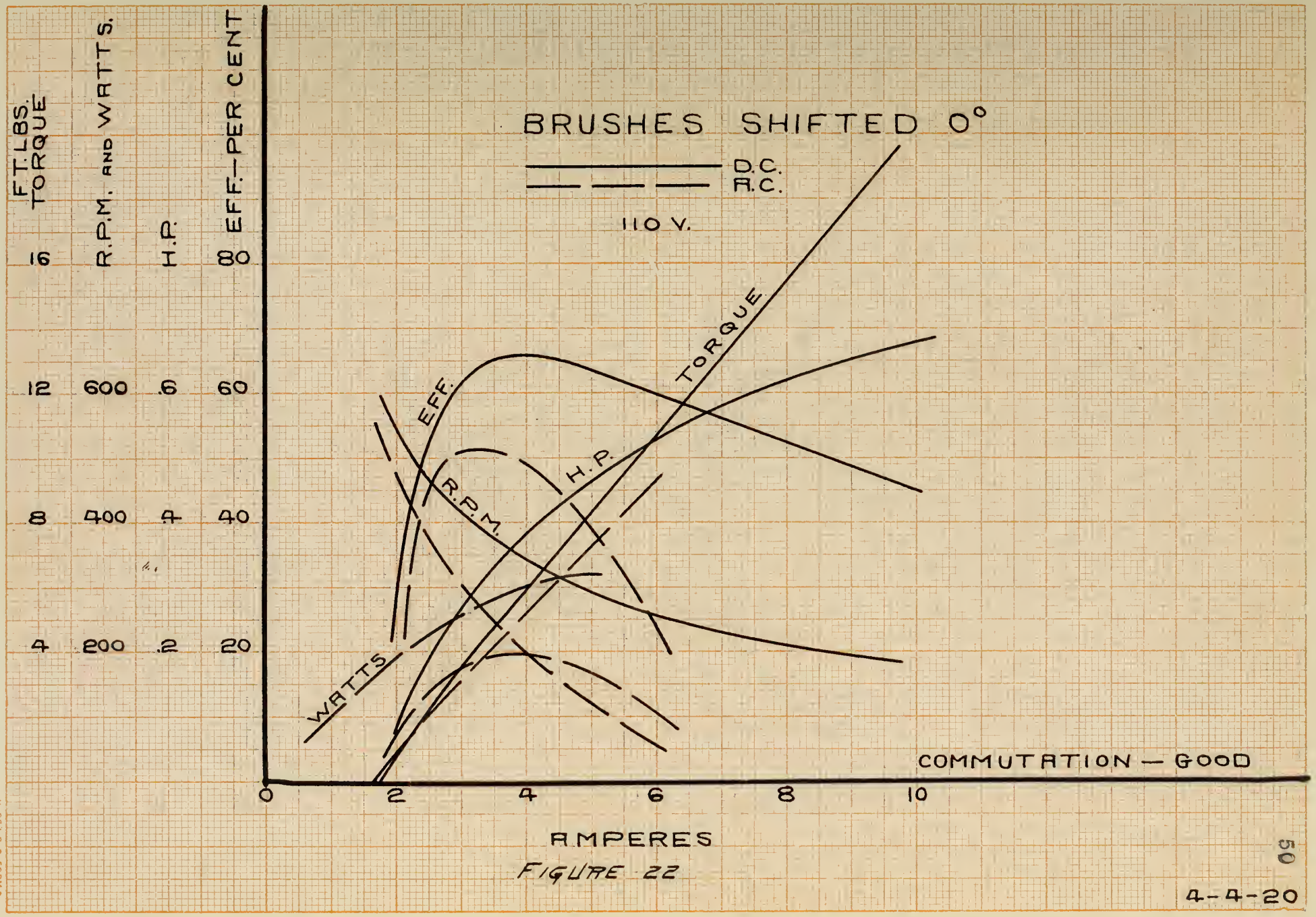

FIGURE 22

4-4-20

U. OF I. S. FORM 3

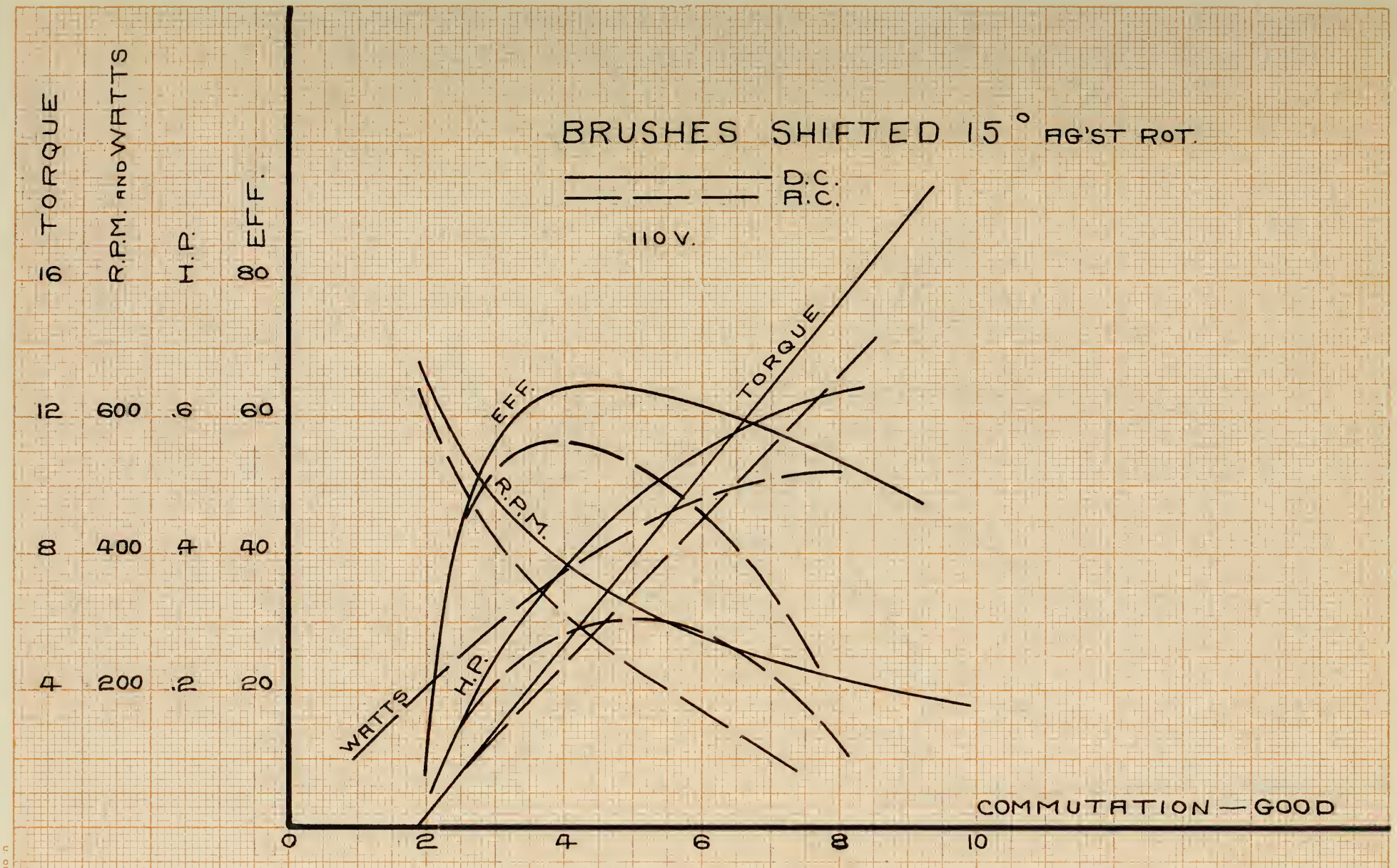

FIGURE 23

51

4-5-20

U. OF I. S. S. FORM 3

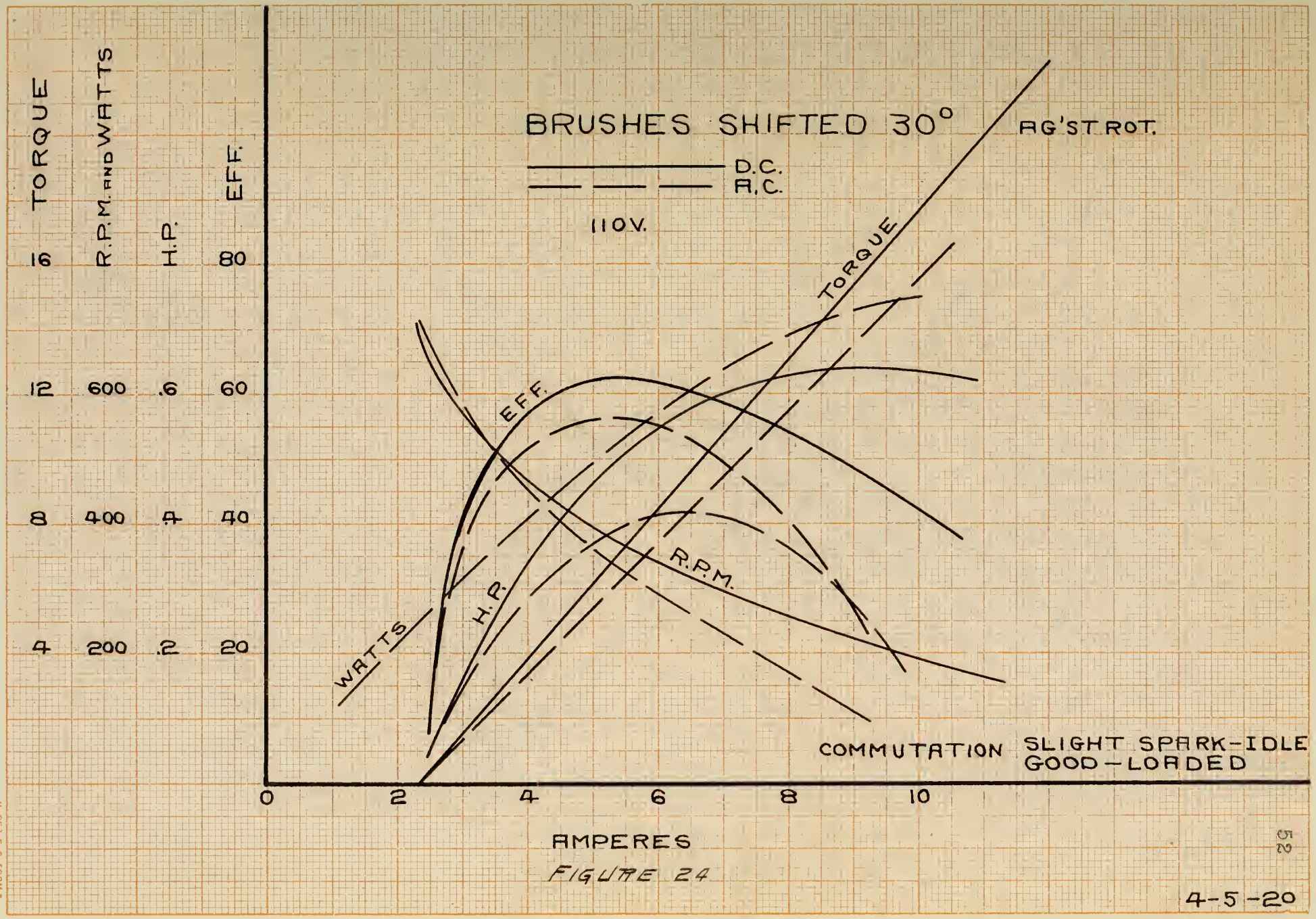

FIGURE 24

52

4-5-20

U. OF I. S. S. FORM 8

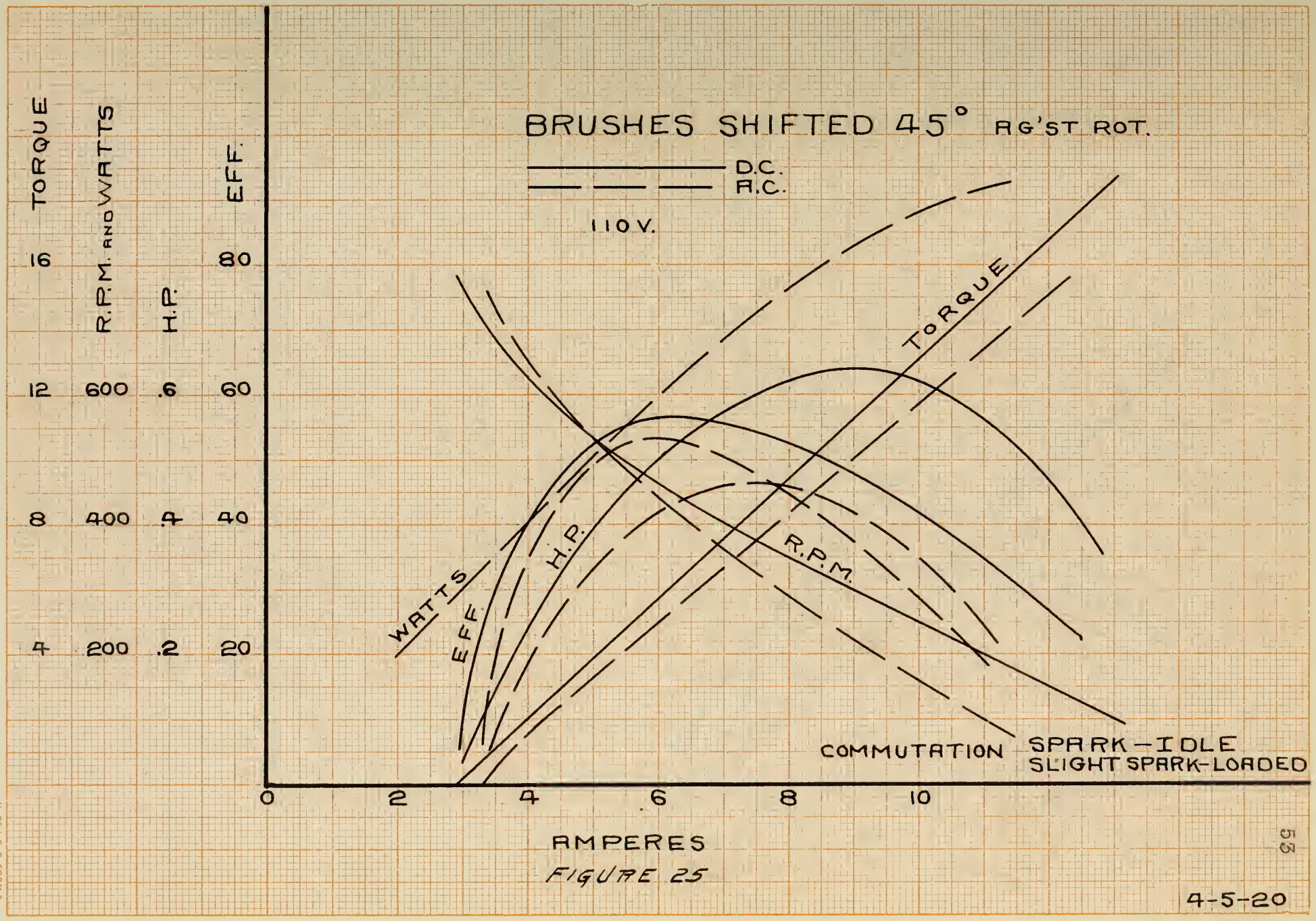

FIGURE 25

4-5-20

U. OF I. S. FORM 3

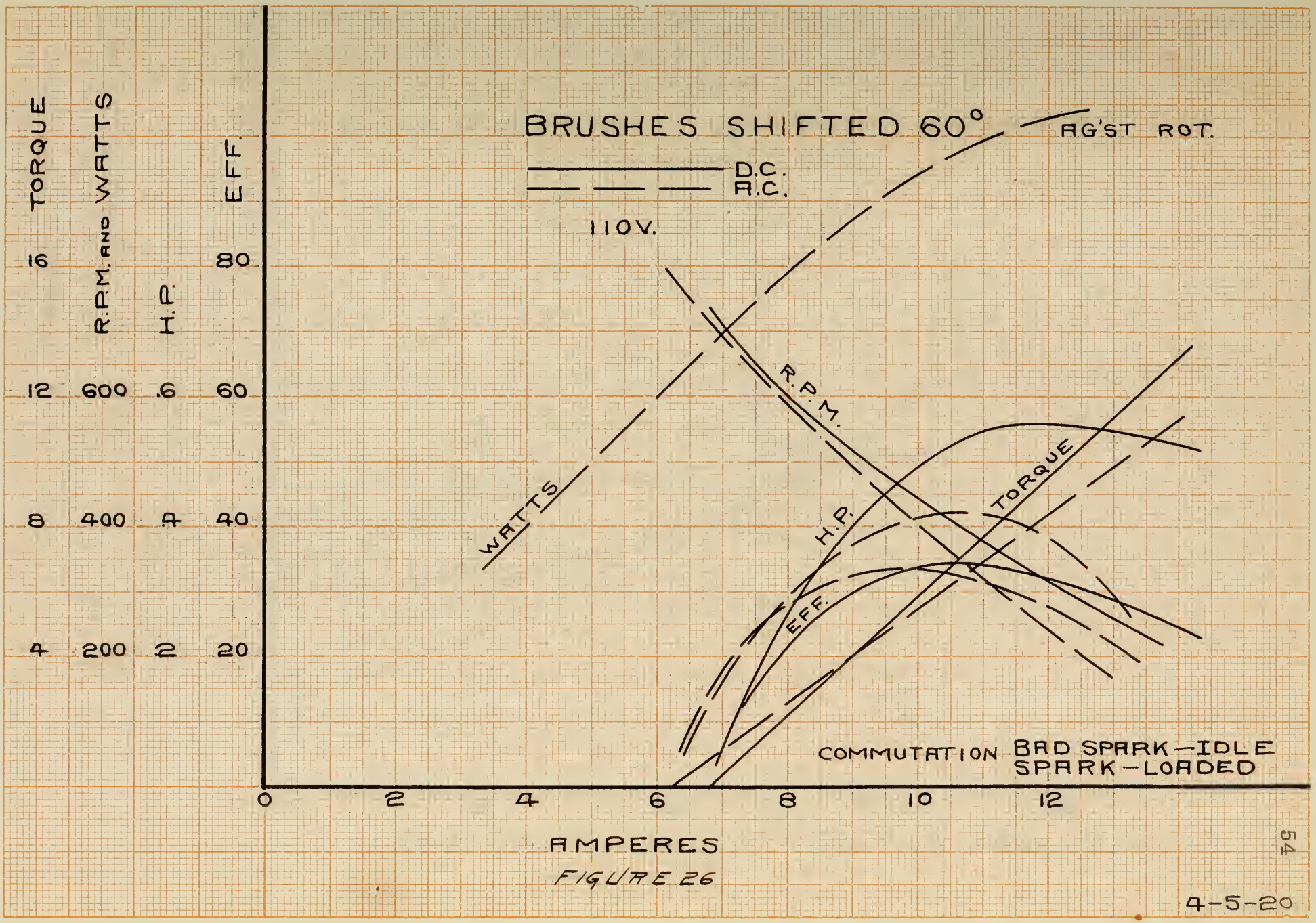

FIGURE 26

54

4-5-20

U. OF I. S. FORM 3

DISPLACEMENT CHARACTERISTICS

AT 5 AMPERES LOAD.

D.C.
A.C.

110 V.

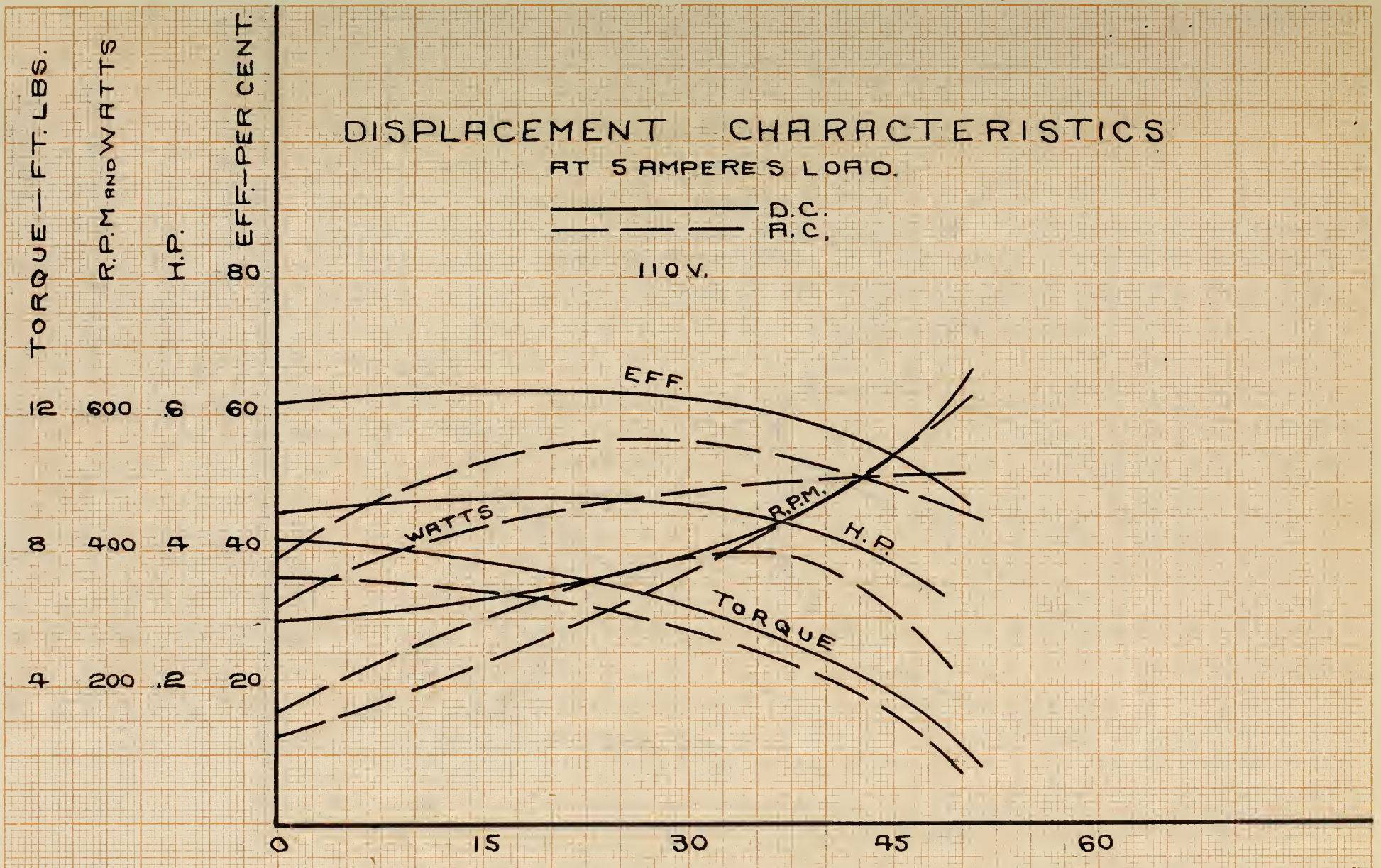

FIGURE 27

4-4-20

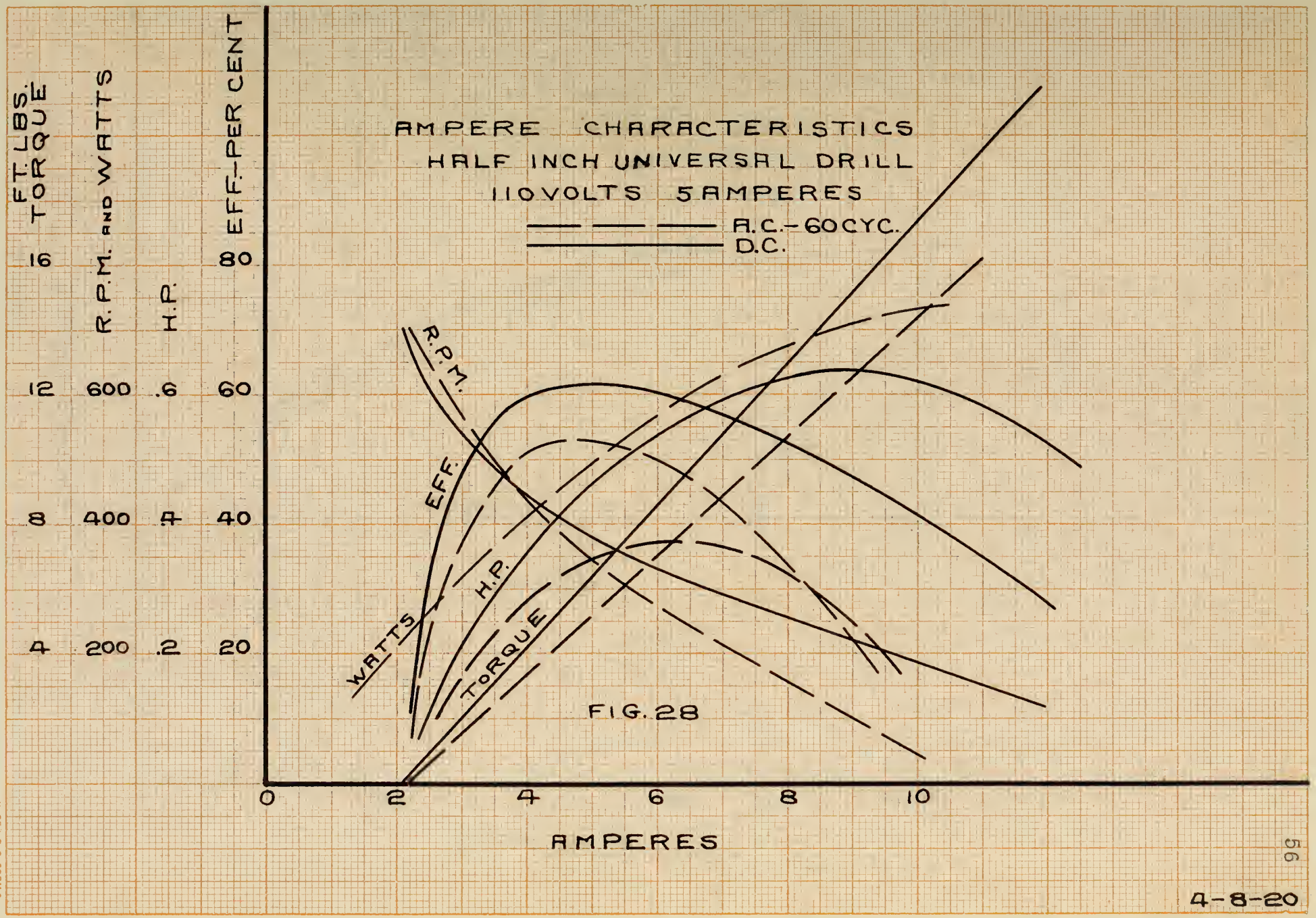
AMPERE CHARACTERISTICS
HALF INCH UNIVERSAL DRILL
110 VOLTS 5 AMPERES
A.C.-60 CYC.
D.C.
FT. LBS. TORQUE
R.P.M. AND WATTS
H.P.
EFF.-PER CENT
16
12
8
4
600
400
200
.6
.4
.2
80
60
40
20
R.P.M.
EFF.
H.P.
WATTS
TORQUE
0
2
4
6
8
10
AMPERES

FIG. 28

4-8-20

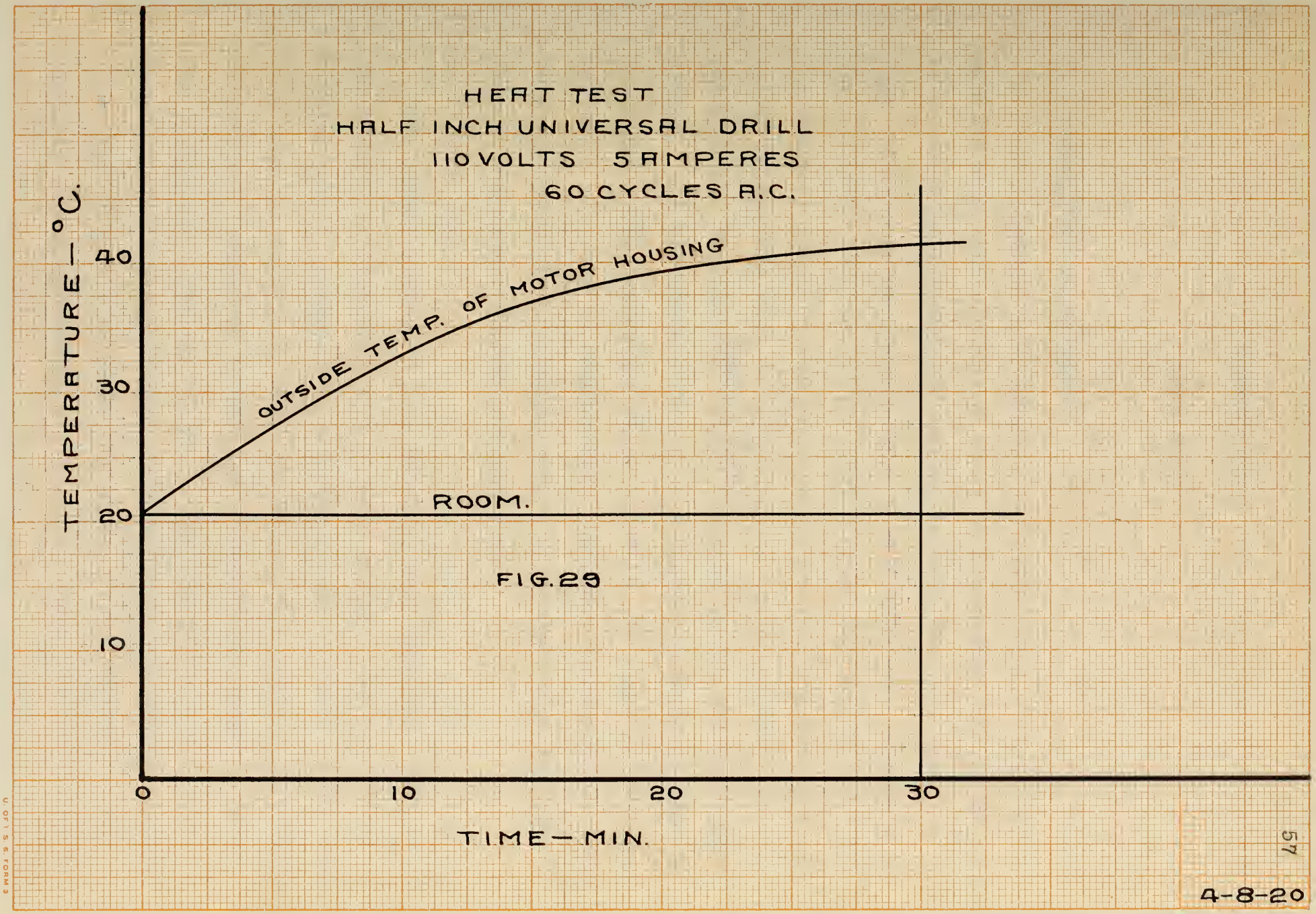

FIG. 29

4-8-20

U. OF I. S. FORM 3

CHAPTER VII

CONCLUSION

1. COMPARATIVE PERFORMANCE

It is interesting to compare the performance of the new machine with that of the one it is to supersede. Figure 30 should be compared with Figure 28 bearing in mind the fact that the armature size and speed are the same in both machines. The data on the old motor is given at the beginning of Chapter IV, Case II. The increase in power available on alternating current from .26 to .37 HP maximum must be attributed to the superiority of the new design. The new tool weighs the same as the old one, 20¾ pounds. All performance data on alternating current is made on the basis of 60 cycles frequency which is the highest frequency for which the tool is recommended. On lower frequencies the alternating current performance would, of course, approach more closely the direct current performance.

2. PATENT STATUS

The patent status of this motor is very important in view of the present litigation over the Burke patent. The use of the divided pole to introduce a reluctance into the path of the armature flux has been known for some time. This feature is conceded by patent attorneys to be covered by Rudolf Eickemeyer's patent No. 664733 which expired in 1917. Thus far Burke has had no success in collecting damages from manufacturers of the salient pole type of universal motor but pending court settlement an analysis of the patent and a conclusion bared thereon is our only

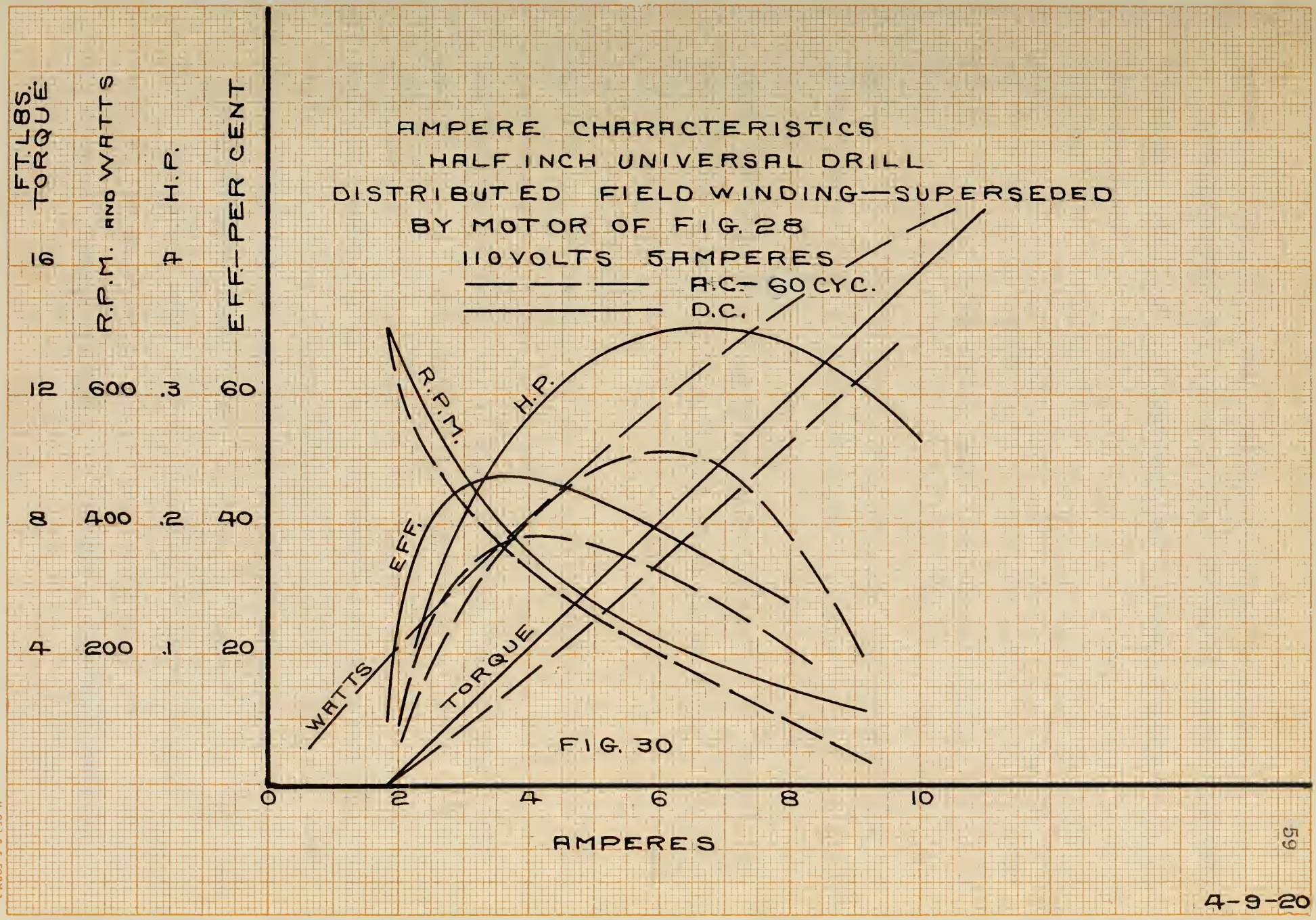

FIG. 30

U. OF I. B. S. FORM 3

4-9-20

means of giving the patent status of the motor described.

An analysis of the ten claims of the Burke patent shows that there are seven features appearing with slight variations in ten combinations.

CLAIM I. In a commutator type of electric motor, the combination of (a) A TOOTHED STATOR HAVING A WINDING PRODUCING DISTRIBUTED POLES. (b) WITH INTERVENING TEETH OF NEUTRAL POLARITY and (c) AN ARMATURE connected in series with the winding of the stator and HAVING A MUCH GREATER NUMBER OF TURNS, (d) THE ARMATURE WINDING BEING INCLINED TO THE ARMATURE AXIS, a commutator and (e) BRUSHES DISPLACED A LARGE AMOUNT BACK OF THE NEUTRAL POSITION TO A POINT WHERE THE SPEED CURVES UNDER APPLIED ALTERNATING OR DIRECT CURRENT OF THE SAME VOLTAGE APPROACH COINCIDENCE, whereby the motor may be operated efficiently under alternating or direct current of the same voltage.

CLAIM 2. In an electric motor for alternating or direct current, the combination of (a) A TOOTHED STATOR HAVING A WINDING PRODUCING DISTRIBUTED POLES (b) WITH INTERVENING NEUTRAL POLE TEETH, an armature, (f) THE ARMATURE AND STATOR SLOTS HAVING AN INCOMMENSURABLE RELATION, a commutator, and (g) BRUSHES BRIDGING MORE THAN ONE COMMUTATOR BAR, (e) SAID BRUSHES BEING DISPLACED A LARGE AMOUNT BACK OF THE NEUTRAL POSITION TO A POINT WHERE THE SPEED CURVES UNDER APPLIED ALTERNATING OR DIRECT CURRENT OF THE SAME VOLTAGE APPROACH COINCIDENCE for securing approximately the same speed and torque under said alternating or direct current.

CLAIM 3. In an electric motor, the combination of a stationary field magnet having windings, an armature carrying a winding, a

commutator, the field and armature being connected in series relation, (b) THE FIELD POLES HAVING INTERVENING POLE TEETH OF LOW MAGNETIZATION, and (c) BRUSHES DISPLACED BACK OF THE NEUTRAL POSITION TO A POINT WHERE THE SPEED CURVES UNDER APPLIED ALTERNATING OR DIRECT CURRENT OF THE SAME VOLTAGE APPROACH COINCIDENCE, whereby approximately the same torque and speed are maintained under either of said currents.

CLAIM 4. In an electric motor, the combination of (a) A STATOR HAVING DISTRIBUTED WINDINGS, a commutator, a series wound (d) ARMATURE HAVING THE CONDUCTORS INCLINED WITH RESPECT TO THE ARMATURE AXIS, (c) THE NUMBER OF ARMATURE TURNS BEING LARGELY IN EXCESS OF THE NUMBER OF STATOR TURNS, (f) THE FIELD SLOTS BEING INCOMMENSURABLE WITH THE ARMATURE SLOTS, and (e) BRUSHES LOCATED BACK OF THE NEUTRAL POSITION BY AN AMOUNT DETERMINED BY APPROXIMATE COINCIDENCE OF THE SPEED CURVES UNDER ALTERNATING OR DIRECT CURRENT OF THE SAME VOLTAGE whereby approximately the same speed and torque are maintained with either current.

CLAIM 5. In an alternating current motor, the combination of (a) A STATOR HAVING DISTRIBUTED WINDINGS a toothed armature having its windings connected in series with the stator winding, a commutator, (c) THE NUMBER OF ARMATURE TURNS BEING LARGELY IN EXCESS OF STATOR TURNS, and (g) TWO BRUSHES EACH BRIDGING MORE THAN ONE COMMUTATOR BAR (e) ADJUSTED TO A LINE OF COMMUTATION WHERE THE SPEED CURVES UNDER ALTERNATING OR DIRECT CURRENT OF THE SAME VOLTAGE APPROACH COINCIDENCE, whereby approximately the same speed and torque are maintained under either current.

CLAIM 6. A combined alternating and direct current motor, (a) PROVIDED WITH DISTRIBUTED WINDINGS to produce cooperative poles in

the two members, (b) THE FIELD POLES HAVING INTERVENING POLAR PROJECTIONS OF LOW MAGNETIZATION, (e) SAID MOTOR HAVING ITS BRUSHES LOCATED AT A POINT REARWARD OF THE NEUTRAL POINT FOR DIRECT CURRENT BY AN AMOUNT DETERMINED BY APPROXIMATE COINCIDENCE OF THE SPEED CURVES UNDER THE SAME ALTERNATING or DIRECT CURRENT VOLTAGE applied to the motor terminals.

CLAIM 7. A combined alternating and direct current motor, provided with a winding on each of its two members, (c) THE INTERIOR WINDING HAVING A LARGE NUMBER OF TURNS RELATIVELY TO THE EXTERIOR WINDING, a commutator provided with (e) BRUSHES SET IN A POSITION WHERE THE SPEED CURVES UNDER A DEFINITE ALTERNATING AND DIRECT CURRENT VOLTAGE applied to the motor terminals ARE IN APPROXIMATE COINCIDENCE.

CLAIM 8. A combined alternating and direct current motor, provided with a commutator and windings to produce cooperative poles in its two members, (b) THE FIELD POLES HAVING INTERVENING SALIENT POLE TEETH OF NEUTRAL POLARITY, (c) THE INTERIOR WINDING HAVING A LARGE NUMBER OF TURNS RELATIVELY TO THE EXTERIOR WINDING, a commutator, and (e) BRUSHES therefore SET AT A POINT IN WHICH THE SPEED CURVES UNDER APPLIED ALTERNATING OR DIRECT CURRENT OF DEFINITE VOLTAGE APPROXIMATE COINCIDENCE.

CLAIM 9. A combined alternating and direct current motor provided with a commutator and (a) DISTRIBUTED WINDINGS TO PRODUCE COOPERATIVE POLES IN ITS TWO MEMBERS, (e) BRUSHES BEARING ON THE COMMUTATOR LOCATED AT A POINT WHERE THE SPEED CURVES UNDER DEFINITE APPLIED ALTERNATING OR DIRECT CURRENT VOLTAGE APPROACH COINCIDENCE, (g) SAID BRUSHES SPANNING TWO COMMUTATOR BARS TO SHORT CIRCUIT A COIL.

CLAIM 10. A combined alternating and direct current motor, (a) PROVIDED WITH A STATOR HAVING A WINDING PRODUCING DISTRIBUTED POLES, (d) A ROTOR HAVING ITS CORE SLOTS LYING AT AN ANGLE TO THE SHAFT, (c) THE ROTOR HAVING A LARGE NUMBER OF TURNS RELATIVELY TO THE STATOR, a commutator, and (e) BRUSHES applied thereto SET AT A POINT OF APPROXIMATE COINCIDENCE OF MOTOR SPEED CURVES UNDER APPLIED ALTERNATING OR DIRECT CURRENT OF THE SAME VOLTAGE.

Claim 7 is the only one which may be applied to the motor described herein. This claim combines features (c) and (e) in a very general way, and it is this claim which will be the center of attack by all manufacturers of universal motors of the salient pole type. Feature (c) has been known and used for many years as is proven by the Hochhausen patent wherein it is covered by Claims 1 and 2. It is very unfortunate that this inventor did not claim the ability of his motor to operate on either alternating or direct current. This would have added greatly to the value of his patent although he states that the object of his invention is to change the design of the direct current series motor so that it may be operated on alternating current.

The extent to which the ratio of turns on the armature and field differs from standard direct current practice is also important. Burke and Hochhausen both use a ratio of approximately 2 to 1. Most direct current motors show a ratio of .8 to .9 and it can be shown that higher ratios are not prohibited in good direct current design. Some designers consider 1.1 as the upper limit. The motor herein described shows a ratio of $\frac{180}{160} = 1.125$.

The other feature of this claim, that referring to the brush displacement, does not specify the amount of displacement nor

the extent to which the speed curves approach coincidence. However, Burke states in the description of his motor that he has found a displacement of 55° to give the best results. The motor herein described uses a displacement of 25° which might be resorted to in a motor for operation on direct current only.

I therefore believe that this motor should not be considered an infringement on the Burke patent because of the differences in design and because I do not believe the U.S. patent office intended to give him a monopoly on the right to build a motor which can be operated on either direct or alternating current.

W. HOCHHAUSEN

ALTERATING CURRENT MOTOR

No. 510,601 PATENTED DEC. 12, 1893

OF THE

(No Model.) 3 Sheets—Sheet 1.

W. HOCHHAUSEN.

ALTERNATING CURRENT MOTOR.

No. 510,601. Patented Dec. 12, 1893.

Fig. 1.

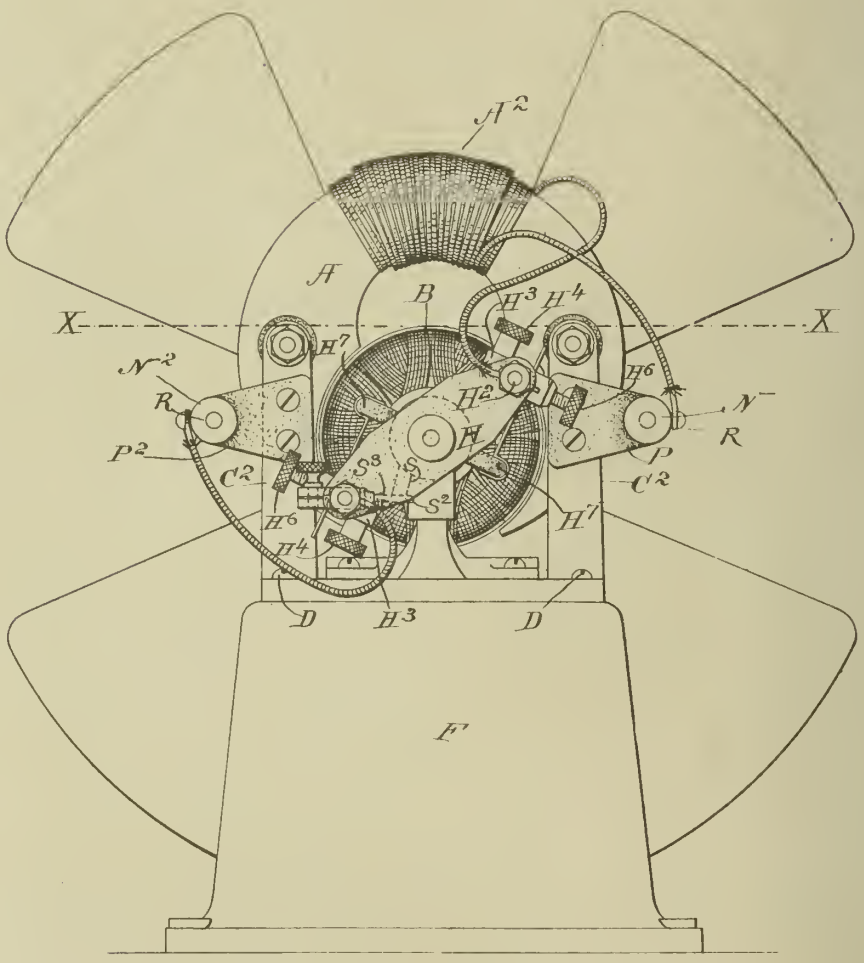

ATTEST:

J. A. Hundley

F. F. Courcy

INVENTOR:

Wm Hochhausen

By H. G. Townsend

Attorney

THE LIBRARY
OF THE
UNIVERSITY OF ILLINOIS

(No Model.)

3 Sheets—Sheet 2.

W. HOCHHAUSEN.

ALTERNATING CURRENT MOTOR.

No. 510,601.

Patented Dec. 12, 1893.

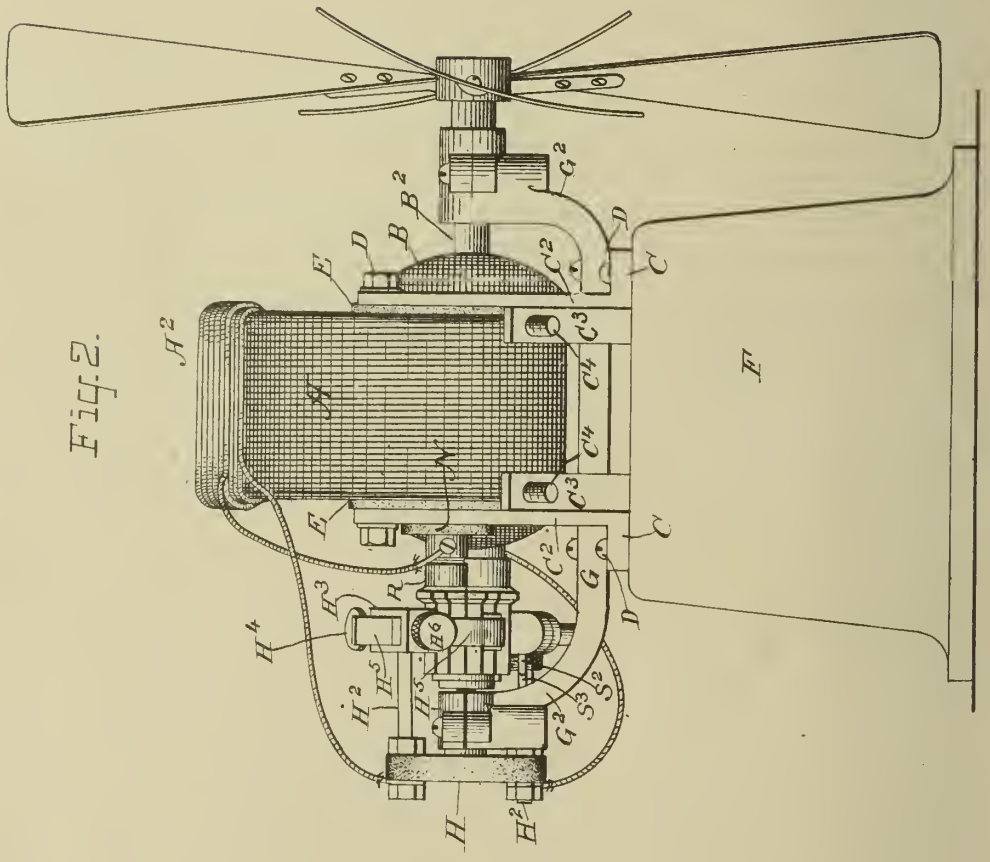

Fig. 2.

ATTEST:

J. A. Thurdle

T. F. Conrey

INVENTOR:

Wm Hochhausen

By H. C. Townsend

Attorney

(No Model.) 3 Sheets—Sheet 3.

W. HOCHHAUSEN.

ALTERNATING CURRENT MOTOR.

No. 510,601. Patented Dec. 12, 1893.

Fig. 4.

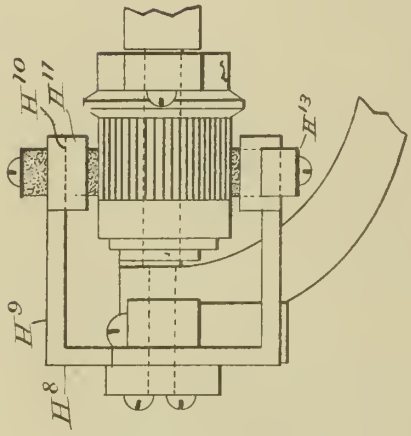

Fig. 5.

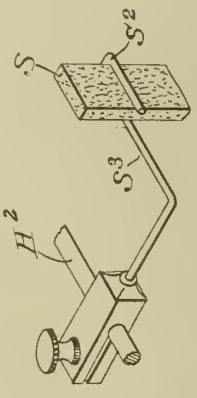

Fig. 3.

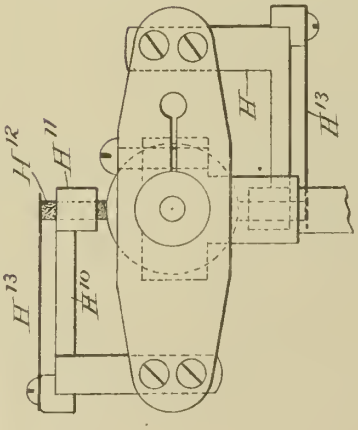

ATTEST:
J. H. Hundley
Wm. H. Capel.

INVENTOR:
Wm Hochhausen
By H. G. Townsend
Attorney

UNITED STATES PATENT OFFICE.

WILLIAM HOCHHAUSEN, OF BROOKLYN, NEW YORK.

ALTERNATING-CURRENT MOTOR.

SPECIFICATION forming part of Letters Patent No. 510,601, dated December 12, 1893.

Application filed September 4, 1891. Serial No. 404,780. (No model.)

To all whom it may concern:

Be it known that I, WILLIAM HOCHHAUSEN, a citizen of the United States, and a resident of Brooklyn, in the county of Kings and State of New York, have invented a certain new and useful Alternating-Current Motor, of which the following is a specification.

My invention relates to alternating current electric motors and is designed to simplify the construction and increase the efficiency of that type of motor which is provided with a commutator and would, if run with a continuous current, have a constant torque in the same direction.

The invention consists in certain improvements in the methods of construction and the details of the device as hereinafter more particularly described and then specified in the claims. It is well known in the art that an electric motor having a commutator and constructed to have a continuous torque in the same direction in all positions of its armature may be run as an alternating current electric motor provided connections are properly made so that the currents flowing through the field and the armature shall alternate at the same time. Thus, a continuous current motor having an armature of the Gramme or Siemens type rotating between two or more poles will operate under the influence of alternating currents because, although at each alternation the poles of the armature may change their sign, the poles of the field magnets will also change their sign at the same time, and there will be a continuity of repulsion and attraction between the armature and field in the same direction. It is a well recognized fact that an ordinary continuous current motor run upon an alternating current circuit does not operate efficiently, the loss of efficiency being ordinarily attributed in greater part to hysteresis, but there is also a loss in the operation of the motor due to the fact that the alternations of field and armature magnetism will not take place at exactly the same time owing to the difference in retardation or lag of the field and armature. In the ordinary constructions of continuous current motors this difference of lag or retardation is very considerable the length of the field magnet being much greater than the length of the portion of magnetic circuit which in the armature requires to be reversed. There is also in ordinary continuous current motors a very considerable length of field magnet coil or a large number of turns thereof which have an effect tending to increase the retardation or counter electro-motive force in the field magnet portion of the circuit. Hence, when the motor is run on an alternating current circuit, the alternations of field magnetism tend to lag behind those of the armature. If the lag were sufficient to cause the magnetism of the field to be at its maximum while the current in the armature be at its minimum, it is obvious that comparatively little torque will result at the times when such relation of magnetism exists, while, if the field magnetism be retarded so that at its minimum the current shall flow or tend to flow at maximum amount in the armature, there will be a great loss owing to the fact that with a minimum field the counter electro-motive force of the motor will be at its least and a current will tend to flow through the armature in such degree as to heat the same without, however, acting effectively owing to the weakness of the field magnetism at this instant. Devices independent of the motor construction itself have been proposed for avoiding this source of loss by bringing the alternations of magnetism in field and armature to coincidence and a great deal of effort has been expended in reducing other supposed losses in the operations of an alternating current motor. The great and important source of loss is, however, the want of synchrouism in the alternations of field and armature, and my present invention consists in eliminating this source of loss by so constructing the field and the armature that their natural times of reversal or inherent magnetic lag or retardation shall be approximately, or as nearly as possible, the same. To this end I decrease the length of the magnetic circuit of the field magnet as well as the number of field coil turns and I increase the size of the armature as much as practicable with a given size of field magnet. By these means I bring down the retardation or lag of the field and increase that of the armature, but while I do not reach the point where absolute synchronism may be obtained, in

ordinary constructions of electric motor, I approximate the same and get a largely increased efficiency.

In the accompanying drawings:—Figure 1, is a side elevation of a machine embodying the principles of my invention as hereinbefore set out as well as the other details of construction hereinafter described and more particularly claimed. Fig. 2, is an end elevation of the machine. Figs. 3 and 4, illustrate a modification in the construction of the parts which support the commutator brushes. Fig. 5, is a perspective view of the lubricating brush or rubber detached from the machine.

A, indicates the field magnet which is made up of a number of rather thin plates of iron assembled together to produce the laminated field magnet core which is required for alternating current apparatus. As will be seen the general form of this core is such as to give a magnetic circuit of the least length and the space between the poles thereof is considerably larger than in the usual constructions of continuous current motors, thus allowing space for an armature B, of large size.

A^2, indicates the field magnet coils applied as here indicated in two layers of turns only and over a small portion of the field core A, as shown at its middle part. The armature B, is wound as a Siemens armature and preferably with a rather large number of turns of wire to give an increased counter electro-motive force while the small number of turns A^2, tend to decrease the counter electro-motive force of the field magnet under the action of the alternating current.

With an armature B, of the diameter of approximately, say, two and three-fourths inches, I find good results obtained by employing three hundred and ninety turns in all of armature wire distributed into ten sections and made up of No. 24 wire.

In a machine proportioned as shown in the drawings and having the diameter of the field magnet on the line X, X, approximately five and three-fourths inches, I find good effects obtained by employing on the field at A^2, say ninety-three turns of No. 17 wire. As will be seen by electricians these proportions give a decreased retardation or lag in the field magnet and tend to permit the alternations of field magnetism at the poles thereof to approach synchronism with the alternations of applied electro-motive force. In the same way the construction of the armature tends to increase its natural retardation or lag so as to cause its alternations of magnetism to fall behind those of the applied alternating electro-motive force and to approach therefore the retarded phases of magnetism in the field.

While I have shown one form of motor in which this construction or proportion of parts is employed with the definite end in view of causing the alternations to approach as nearly as possible to coincidence or synchronism in the armature and field, it is obvious that my invention might be realized in other constructions by properly modifying the proportions of field and armature, as hereinafter set forth.

Having described the main feature of my invention, I will proceed to describe other details of the construction of the motor herein illustrated.

C, C, indicates a divided base plate or plate made in two parts and from which the field magnet is supported. Rising from each plate are two standards C^2, C^2, one for each side or leg of the field magnet A. The plates of the latter are bolted together between the standards C^2, of one base plate and those of the opposite base plate C, as indicated, by bolts D, which are, however, insulated from the field magnet by insulation indicated at E. The plate C, having the standards C^2, form,—as will be seen, two parts of a field magnet supporting frame which is mounted upon a proper pedestal F, being bolted to the latter as indicated. Flanges or lugs C^3, extend from the standards C^2, and through them pass set screws C^4, adapted to bear against the field magnet core and stay it in position or adjust its pole slightly with relation to the armature.

The armature, whose shaft is indicated at B^2, is supported by an independent frame or plate indicated at G, which latter terminates at opposite sides of the field magnet in journal bearing posts, standards or extensions G^2. The armature supporting frame thus furnished by the plate G, and its standards extends across beneath the field magnet A, over the space between the two plates C, C and is preferably bolted directly to the latter thus staying the latter in position.

It will be seen that by this construction the armature and its attached parts may be readily removed from position between the poles of the field magnet complete by simply detaching the plate or frame G, from the base.

The commutator of the machine may be of any desired construction. A simple form has its brushes mounted upon a yoke H, of some insulating material which is sleeved on the armature shaft and carries lateral posts or arms H^2, parallel to the armature shaft and upon which are mounted blocks H^3, of some conducting material which are split where they embrace the posts and are provided with set screws H^4, as indicated, for tightening them upon said posts. Passing through the blocks H^3, are springs or arms H^5, of some conducting material, which may be set in any longitudinal position by means of screws H^6. The free ends of the arms or springs H^5, terminate in contact blocks of any desired material adapted to bear on the commutator cylinder. In the present instance these blocks are shown as consisting of carbon blocks H^7, held in the springs H^5, by simply crimping or compressing the bent ends of said springs upon the carbons.

In place of this construction of commutator, I sometimes employ the form illustrated in Figs. 3 and 4 where each brush supporting

arm is shown as consisting of a plate H^8, bolted to the yoke and extending radially therefrom or in a direction at right angles to the armature shaft and provided with a lateral arm or extension H^9, parallel to the armature shaft from which in turn extends at right angles or in a direction over the commutator another arm H^{10}, the terminal of which over the commutator consists of a perforated block H^{11}, through which the block of carbon or other conducting material H^{12}, may slide, being held in contact with the commutator by means of a spring H^{13}, which is attached to some part of the arm.

The terminal binding posts of the machine are indicated at N, N^2. They are supported respectively upon plates P, P^2, of some insulating material and which are bolted or secured in any proper way to the standards C^2. The binding posts N, N^2 are furnished with proper attachments for making the connections with the field magnet and commutator, and also have the usual fastening nuts R, by which the two feed wires of the circuit supplying the alternating currents may be attached. As shown, the post or body of one binding post N, connects to one terminal of the field magnet A^2, while the latter is connected with one of the posts or arms supporting a commutator brush. The opposite commutator brush connects as shown by a wire leading to the opposite terminal post of the machine N^2, thus putting the field and armature in series circuit with one another. The connections may obviously, however, be made to plates for any parallel circuits if desired.

The machine as thus connected up may be run with efficiency from constant potential mains of the usual voltage connected to the terminal posts N, N^2.

At S, I have shown a lubricating rubber of some absorbent material holding a lubricant and sustained by a suitable arm or support in constant rubbing connection with the commutator cylinder or collecting ring of the machine. As a rubber I prefer to employ a block of felt or similar absorbent adapted to hold a small amount of lubricant without allowing it to flow freely over the surface of the cylinder. This lubricating rubber or block I support in a spring clip formed at S^2, on the end of an arm S^3, which is sustained from the arms H^2, or some other fixed part of the machine in proper position to hold the lubricating rubber in continuous contact with the commutator cylinder. If the block of absorbent material be moistened with a drop or two of ordinary lubricating oil it will serve to furnish during continuous running of the machine a sufficient amount of lubricant to prevent the cutting of the commutator blocks by the commutator brushes of the machine.

While I have described the use of felt, I do not limit myself to such material but might use a lubricating rubber itself otherwise constructed, but preferably mounted in a support or arm by which it will be allowed to rest in continuous connection with the commutator and to supply, when it has once been moistened, the proper amount of lubricant. By this means I obviate the necessity of periodically applying an oil rag to the commutator by hand which is a troublesome operation and must be very delicately done in order not to apply too much oil to the cylinder. The lubricating rubber described and shown should have the oil applied, preferably, at a point some distance from the commutator cylinder. The latter will be applied in sufficient amount through the absorbent action of the block which by capillary action draws the oil to the surface running upon the commutator.

What I claim as my invention is—

1. In an alternating current motor constructed to have a constant torque in the same direction, the combination, with a commutator, of an armature constructed to have in relation to the alternations of the applied electro-motive force an increased lag or retardation, and a field magnet constructed to have in relation to the alternations of the applied electro-motive force a decreased lag or retardation, as and for the purpose described.

2. The herein described improvement in alternating current motors having a constant torque in the same direction, as described, consisting in the combination of armature and field cores of unequal mass and coils therefor, respectively, of inversely unequal mass of copper to cause an approximation between the alternations in the armature and field.

3. The combination substantially as described, of a field magnet core and supporting frame mounted upon a suitable base, and an armature supporting frame mounted beneath the field magnet but upon the supporting frame for the latter and removable with the armature in place without disturbing the supports for the field magnet.

4. The combination substantially as described, with a field magnet supporting plates C, having the standards or uprights C^2, of a base plate G, supported upon the plates C, and terminating in journal bearing posts or standards on which the armature of the machine is mounted.

5. The combination substantially as described, with a field magnet core and the supporting standards between which it is bolted, of the set screws C^4, passing through lugs or flanges extending from said standards, and bearing against the core of the magnet as and for the purpose described.

6. The combination substantially as described, with the uprights or standards supporting the field magnet, of the two plates of insulating material P, P^2, bolted to the face thereof and carrying the terminal posts of the machine.

7. The combination substantially as described, of the field magnet core, the base plates or blocks C, having uprights C^2, be-

tween which the field magnet core is bolted, and plates P, P^2, of insulating material attached to said uprights or standards and carrying the main binding posts of the machine to one of which the field magnet coil is directly connected.

8. In a commutator, the combination substantially as described with the brush supporting arms or posts, of the springs H^5, of conducting material bent at their outer ends to form clamps and fastened in blocks on the ends of said arms, and brushes of carbon or other conducting material upon which the bent ends of the spring are crimped or compressed.

9. The combination with the commutator or collecting cylinder upon which the conducting brushes bear, of a lubricating rubber, a spring clip for supporting the same, and a clamp for securing said clip to the machine in a position such that said rubber will bear continuously upon the collecting cylinder.

10. The combination with the commutator or collecting cylinder upon which the conductor brushes bear, of a lubricating rubber consisting of a block of felt, a clip for holding the same, and a clamp carrying said clip and secured to one of the brush-carrying arms in a manner to cause said rubber to continuously engage the collecting cylinder.

Signed at New York, in the county of New York and State of New York, this 14th day of July, A. D. 1891.

WILLIAM HOCHHAUSEN.

Witnesses:
WM. H. CAPEL,
THOS. F. CONREY.

J. BURKE.
UNIVERSAL MOTOR.
APPLICATION FILED SEPT. 9, 1909.

1,053,940. PATENTED FEB. 8, 1913.

J. BURKE.

UNIVERSAL MOTOR.

APPLICATION FILED SEPT. 9, 1909.

1,053,940.

Patented Feb. 18, 1913.

3 SHEETS—SHEET 1.

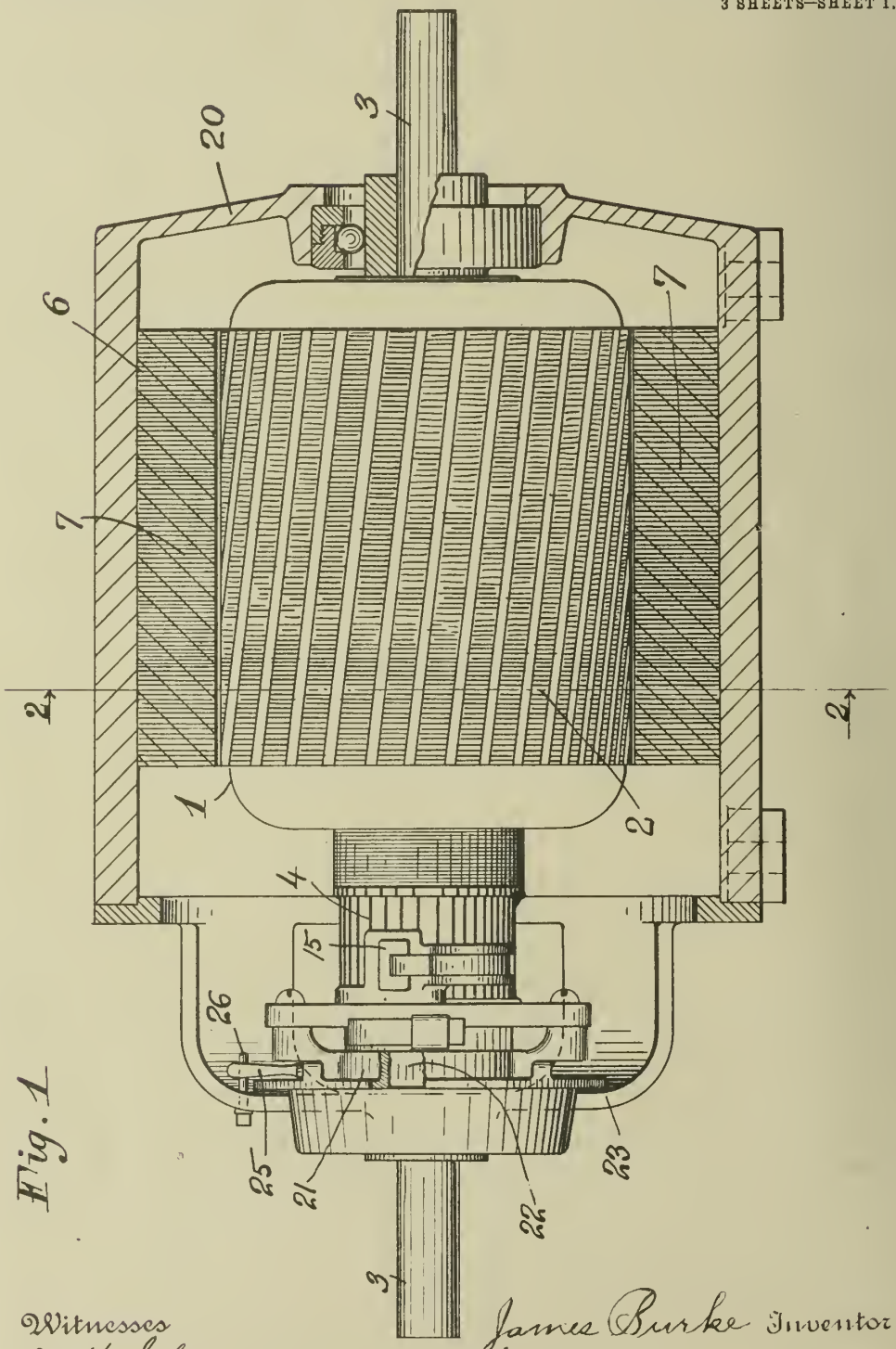

Fig. 1

Witnesses
A. K. Schneider
Geo. H. Kerr

James Burke Inventor
By his Attorneys
Edwards, Sager & Wooster

J. BURKE.

UNIVERSAL MOTOR.

APPLICATION FILED SEPT. 9, 1909.

1,053,940.

Patented Feb. 18, 1913.

3 SHEETS—SHEET 2.

Fig. 3

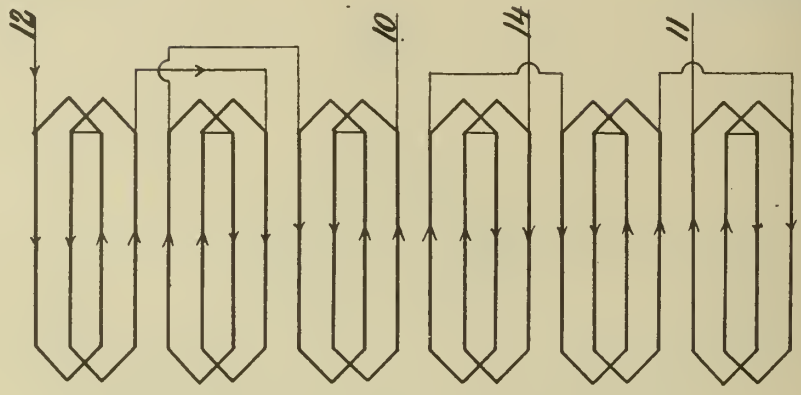

Fig. 2

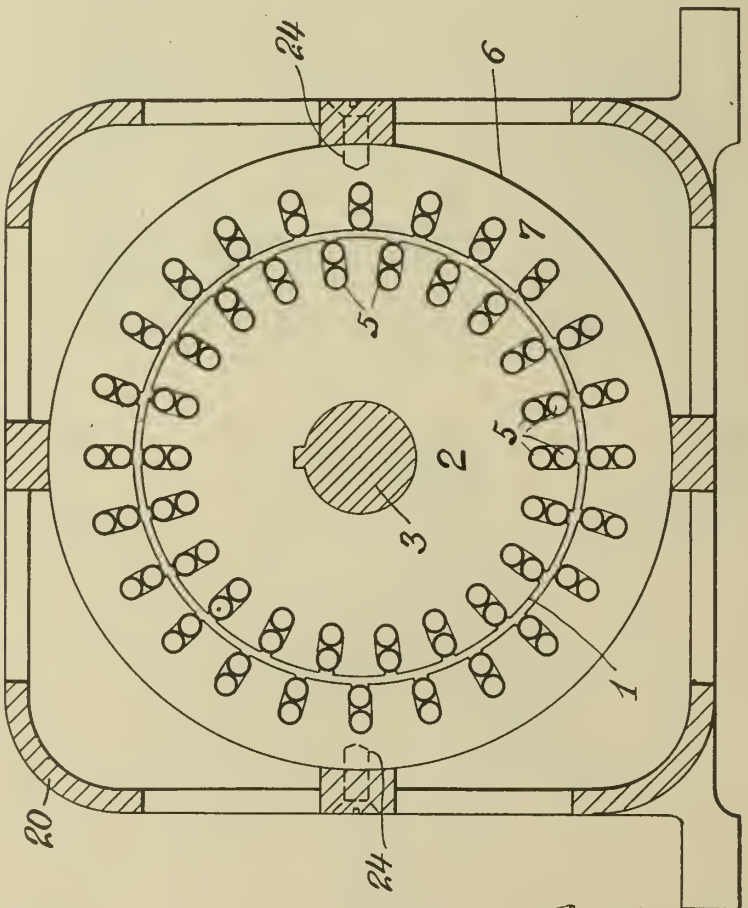

Witnesses

A. F. Schneider

Geo. N. Kerr

James Burke Inventor

By his Attorneys

Edwards, Sager & Wooster.

J. BURKE.

UNIVERSAL MOTOR.

APPLICATION FILED SEPT. 9, 1909.

1,053,940.

Patented Feb. 18, 1913.

3 SHEETS—SHEET 3.

Fig. 4

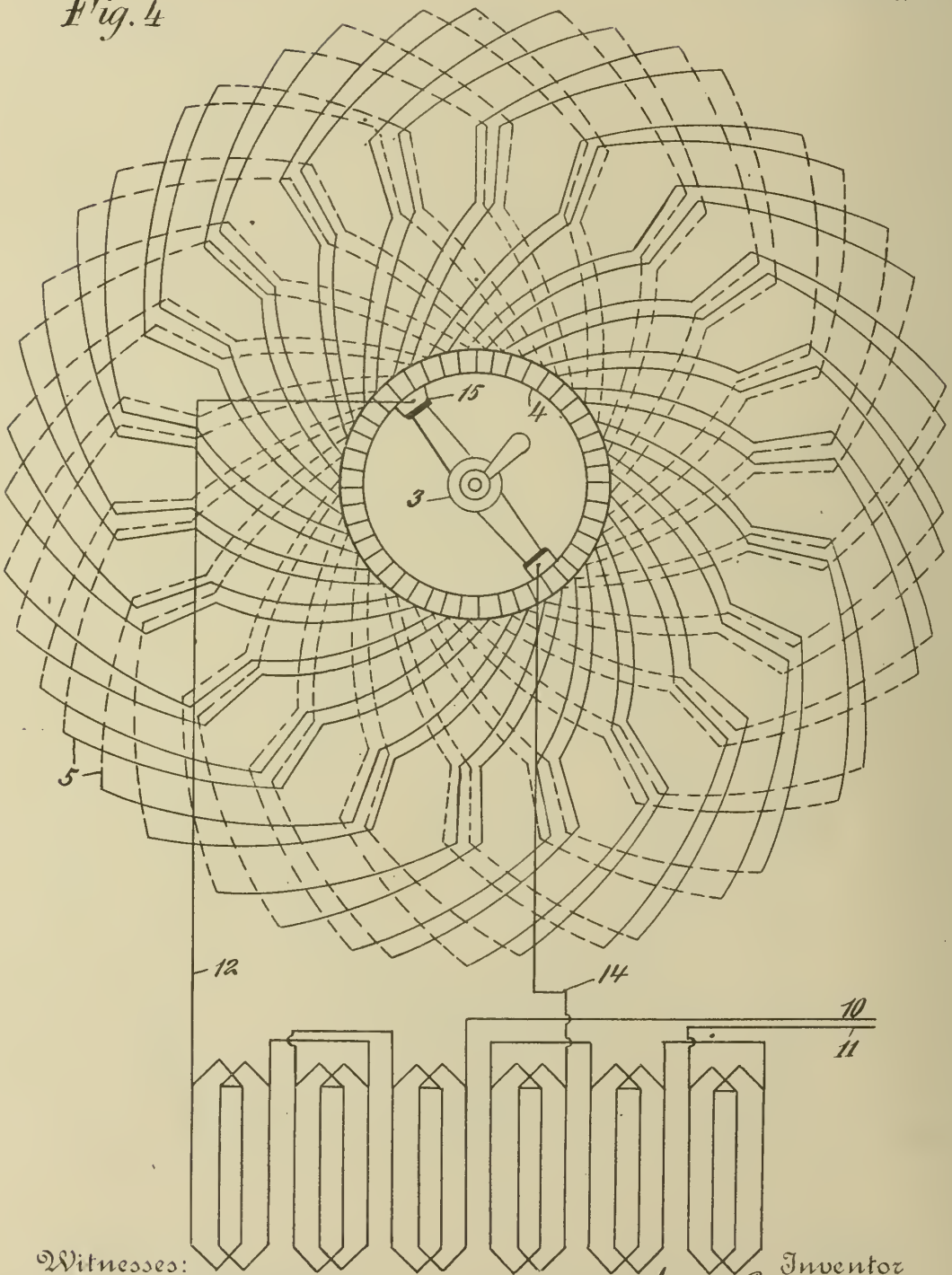

Witnesses:
Edmund O. Dubocq.
H. C. Egan.

Inventor
James Burke
By his Attorneys
Edwards, Sager & Wooster.

UNITED STATES PATENT OFFICE.

JAMES BURKE, OF ERIE, PENNSYLVANIA, ASSIGNOR TO BURKE ELECTRIC COMPANY, A CORPORATION OF PENNSYLVANIA.

UNIVERSAL MOTOR.

1,053,940. Specification of Letters Patent. Patented Feb. 18, 1913.

Application filed September 9, 1909. Serial No. 516,898.

To all whom it may concern:

Be it known that I, JAMES BURKE, a citizen of the United States, residing at Erie, in the county of Erie and State of Pennsylvania, have invented certain new and useful Improvements in Universal Motors, of which the following is a full, clear, and exact specification.

This invention relates to electric motors, and more particularly relates to an electric motor which is adapted to be actuated by either single phase alternating currents or direct currents, and to a method of varying the speed and changing the direction of rotation of the motor when supplied with alternating current of the same voltage.

It has heretofore been proposed to employ series motors of the direct current type in connection with a single phase alternating current for generating power. However, such prior devices have not been successful to any such degree as to render them commercially satisfactory. Such prior motors may be grouped into two classes, the first class embodying motors which, on account of inherent defects, such as difficulties in regulation, injurious sparking of the brushes, excessive heating and low efficiencies, are of practically no commercial value; the second class comprising those motors which necessitate additional parts, such as high resistance leads in the armature windings, complicated auxiliary windings in the field, extra brushes or sets of brushes, and the like, render the cost of materials and of assembling the complete motor prohibitive for general commercial use, and at best are not well adapted for ordinary commercial conditions. Furthermore, all such prior motors, so far as I am aware, are incapable of yielding the same speed of rotation for either a single phase alternating current or a direct current under conditions of substantially the same impressed potential and equal loads.

According to my invention, my motor is capable of being actuated either by single phase alternating current or by direct current of the same applied voltage, and is capable of giving the same speed under either current. Thus, one of my motors may be applied to any commercial alternating or direct current circuit without the use of any accessory apparatus or any change of adjustment by simply applying the alternating or direct current voltage to its terminals, and will in either case give the same speed and high torque; my motor is capable of being operated at a high efficiency for either character of current, and may be readily regulated without auxiliary devices. Furthermore, my motor is free from all injurious sparking of the brushes and all excessive heating and requires no additional parts, such as resistance leads, auxiliary field windings, or extra brushes. The above highly advantageous results attained by my motor, are substantially independent of the number of cycles of the single phase alternating current.

A salient feature of my arrangement and construction, which is of great utility, is that under conditions of the same applied potential and equal load, substantially the same speed of rotation is attained when said motor is supplied by a single phase alternating current or by a direct current, and at substantially the maximum efficiency for either character of current.

My preferred form of motor is provided with distributed poles in the stator, the alternating poles being of opposite polarity, and by avoiding pole projections, I obtain a uniform air gap between the stator core and the rotor core. In my motor the number of rotor turns are high relatively to the stator turns, being, in fact, preferably twice the number of stator turns; these turns are connected by the commutator bars in continuous series as a distributed winding and each brush spans two commutator bars, thus short-circuiting a portion of the winding under the brush and providing two paths in parallel for the rotor current; moreover, the number of poles are not commensurable with the number of slots carrying rotor coils, there being, for example, twenty-two rotor slots and six stator or field magnet poles, thus providing a region in which the flux through the rotor is not sharply defined with reference to its coils; moreover, the field winding is distributed in a stator having twenty-four slots, the stator coils being placed so that salient neutral core projections lie between consecutive poles. These structural features prevent the sharp variations of electromotive force which are further reduced by the rotor slots lying at

an angle to the axis of rotation and to the plane of the field magnet poles. The aggregate result of this struoture is to permit an unusually wide range of brush position without sparking.

My invention further provides for a definite brush position rendered possible by the structure above referred to which not only permits wide variation of speed with different brush adjustments, but admits of a certain definite brush adjustment at which the motor will run with large torque at the same speed under applied alternating current or direct current of the same voltage; this is a distinctively new feature in motor operation and one of great industrial advantage as it permits the same motor to be applied without any change whatever to commercial circuits whether alternating or direct with equivalent results.

More specifically, the stator of my motor embodies a plurality of coils disposed in slots in a laminated field frame, the rotor embodying a plurality of coils similarly disposed in slots in the laminated rotor core, said stator coils and said rotor coils being connected in series by means of a commutating device and suitable brushes. The rotor winding of my motor is series-wound, each slot containing parts of two coils of many turns each, the armature having two circuits from one brush to the other each being equal in number of turns to the stator turns. The width of the brushes is such as to inter-connect two bars of the commutator, whereby each brush short-circuits each coil in succession.

Other features of my invention may be more fully understood from the following description and the accompanying drawings, in which—

Figure 1 is a view showing the stator and frame in central vertical section, the rotor, commutator and brush elements being shown in elevation; Fig. 2 is a sectional view on the line 2—2 of Fig. 1; and Fig. 3 is a diagrammatic development of the stator winding and connections between the same and the brushes and terminals of the motor; Fig. 4 is a diagrammatic view of the motor windings.

My invention is not limited to motors of specific dimensions as a whole, or as regards the several parts, nor to materials and relative arrangements; the motor hereinafter described embodies the several principles of my invention in the best form which I have thus far been able to design, but in presenting these several features, I do not intend thereby to limit the scope of my invention.

As shown in the drawings, the rotor 1 comprises a laminated core 2 of magnetic material, said core being fixedly mounted on a shaft 3, the commutator being shown at 4. The laminæ of core 2 are provided with openings at or near their periphery to form slots, which, in the present instance, are twenty-two in number, and in which are mounted the insulated conductors 5, constituting the coils of the armature winding. Each slot contains windings of two coils, the windings of one coil at the end of said slot passing in one direction and the windings of the second coil at the ends of said slot passing in the opposite direction as is clearly shown in Fig. 4. In the present instance, one coil passes from the first slot to the fourth slot, and the second coil passes an equal number of slots in the opposite direction, namely, from the first slot to the twentieth slot, and so on around the core; thus completing the arrangement of armature windings to be connected to form a series-wound armature. The winding diagram of the rotor is clearly illustrated in Fig. 4, which shows also the circuit relations of the rotor and stator.

As shown in Fig. 1, the slots in the armature core are disposed at a suitable angle to the axis of the armature core, which angle in the instance cited, is sufficient to bridge one stator tooth. This slant in the rotor core slots in relation to the field gives such uniform relationship as to assist in permitting a large range of flexibility in brush position without injurious sparking because of the gradual entrance of the rotor teeth into the fields of the stator, and thus assists in securing uniform action with either direct or alternating currents.

It is apparent that the core teeth will have an oblique approach to any of the field poles, and thereby less sudden reactions of the rotor and stator fluxes will result, preventing steep peaks of E. M. F. and therefore widening the area of brush adjustment without the production of excessive sparking or heating at the commutator.

In the specific motor illustrated, the stator 6 comprises a laminated frame 7 of magnetic material of uniform inner diameter, the core being built up of thin plates or laminæ properly assembled, said plates being provided with openings at or near their inner periphery to form slots, which, in the present instance, are twenty-four in number. The insulated windings of the stator are mounted in said stator slots, as indicated in Fig. 3, to form two groups, each group comprising three pairs of series-connected coils, the coils being represented by the heavier lines. Taking any pair of coils, the windings of one coil, having a sufficient number of turns, may be placed in a first slot and a third slot, the windings of the other coil of the pair being placed in a second slot and a fourth slot. The connections (indicated by lighter lines) between the several pairs of coils in both groups is

such as to give rise to alternate poles of reverse polarity, that is, in the present instance, a series of three form a north and three form a south pole and a stator tooth of neutral polarity will lie between said north and south poles. As will be evident from Figs. 2 and 3, the motor shown in the drawing has six field poles spaced at equal angles and produced by six groups of coils; as the stator has twenty-four teeth there will be six poles of three teeth each and six neutral teeth in which latter a weak distributed polar region will exist. Current is led to the commutator by two brushes 180° apart. Assuming a certain direction of current supply, the arrows indicate the path of the current. One terminal of each group of stator coils is brought out and connected to one terminal of the motor; in the present instance, the terminal 10 may be connected to one supply main, the terminal 11 being connected to the other supply main. The other terminals 12 and 14 are brought out and connected to the two brushes respectively to give a proper series connection of rotor and field windings.

I have found that the relationship of the number of armature turns to the number of stator turns is of great importance in attaining the objects of my invention, and that the armature turns should largely exceed the stator turns, and in my preferred form the armature turns are approximately twice the stator turns.

In the form of motor as described, and with the brushes placed in the neutral position, the speed of the motor when supplied with direct current is very largely in excess of the speed when alternating current is supplied of substantially the same voltage. If, however, the brushes be shifted backward as regards direction of rotation, the speed with direct current increases only slightly, and the speed with alternating current increases a comparatively large amount. Further backward shifting of the brushes similarly causes comparatively slight increase in speed with use of direct current, and a comparatively large amount with use of alternating current, until at a certain angle of retardation the speed will be substantially the same with either form of current with the same torque. In the form of motor particularly described above, the brush position, when substantially the same speed is obtained with either form of current, is at an angle of retardation of approximately fifty-five electrical degrees back of the neutral brush position, and substantially maximum efficiency is obtained in either case. In any of these brush positions, no injurious sparking occurs, and with proper position, as above explained, the motor may be used as a universal motor, the brushes being fixed at that point giving the same speed with either direct or alternating current of substantially the same voltage and with the same torque. The speed and the efficiency is also substantially independent of the frequency of the alternating current. If desired, the brushes may be initially set in this position when the motor will run at the same speed on commercial circuits carrying either alternating or direct current. With this form of motor, it will be seen that when used as an alternating current motor, the speed may be controlled as desired by merely shifting the brushes to a position corresponding with the desired speed, and that I thus secure a variable speed alternating current motor without the necessity of any auxiliary apparatus. At the usual position of highest speed and power of the motor when alternating current is used, a further backward movement results in a reduction of speed with an increase of current until at a brush position of ninety electrical degrees from the mechanical neutral point, the armature would be at rest, but with a very large current flowing and the motor would form practically a short circuit upon the line which would of course damage the motor. If, however, the brushes are moved from the position of highest speed and work in the same direction of rotation as the motor, the speed is reduced and the current consumption is also reduced, so that at a position of ninety electrical degrees in the forward direction from the mechanical neutral the motor comes to rest and an extremely small current flows through the motor due to the combining of the armature and stator field to present maximum self-induction. Still further movement of the brushes in the same direction results in the reversal of direction of rotation of the motor, so that continuing the movement of the brushes in the same direction now becomes a backward movement with reference to the rotation of the motor. If the direction of the brush movement be now continued in the same direction as before, but against the reverse movement of the motor, the speed will gradually increase until a position is reached where the speed and power become the same as at the original starting position referred to, but with the direction of rotation of the motor reversed. It will thus be understood that with the form of motor above described, the same is capable of extreme variations in speed in both directions when an alternating current is used and that the reversal of rotation is obtainable by merely shifting the brushes without the necessity of opening the motor circuit and without abnormal current flow or damage to the motor. In general, the complete reversal from any speed and power in one direction to the same speed and power with the motor reversed is accomplished by mov-

ing the brushes through the sum of one hundred and eighty degrees plus twice the angle of retardation.

It is important in this form of motor that all parts be rigidly supported and ample ventilation be obtained. I provide for this purpose a casing 20, which is of rectangular form, as more clearly shown in Fig. 2, and which envelops the circular exterior of the stator frame. The casing 20 is provided with large openings for securing ventilation, and engages the exterior of the stator frame only on four lines of contact, the laminæ of the stator being fixed to the casing by two screws 24. I mount the two brushes 15 on an annular ring 21, which is rotatably mounted on the stub 22 of the removable end frame 23. A handle 25 fixed to the ring 21 is provided for shifting the ring as desired and two stops 26 are located on the end frame 23 spaced apart an angular amount equal to 360 electrical degrees less the sum of 180 electrical degrees plus twice the predetermined angle of retardation for preventing an operator from rotating the brushes through a position on which would cause the motor to be damaged.

It will be understood that although I have shown and described a specific embodiment of my invention, yet my invention may be embodied in other forms of construction, and have other relationships than those particularly described.

Having thus described my invention, I declare that what I claim as new and desire to secure by Letters Patent, is:

1. In a commutator type of electric motor, the combination of a toothed stator having a winding producing distributed poles with intervening polar teeth of neutral polarity, and an armature connected in series with the winding of the stator and having a much greater number of turns, the armature windings being inclined to the armature axis, a commutator, and brushes displaced a large amount back of the neutral position to a point where the speed curves under ap alternating or direct current of the same voltage approach coincidence, whereby the motor may be operated efficiently under alternating or direct current of the same voltage.

2. In an electric motor for alternating or direct current, the combination of a toothed stator having a winding producing distributed poles with intervening neutral pole teeth, an armature, the armature and stator slots having an incommensurable relation, a commutator, and brushes bridging more than one commutator bar, said brushes being displaced a large amount back of the neutral position to a point where the speed curves under applied alternating or direct current of the same voltage approach coincidence, for securing approximately the same speed and torque under said alternating or direct current.

3. In an electric motor, the combination of a stationary field magnet having windings, an armature carrying a winding, a commutator, the field and armature windings being connected in series relation, the field poles having intervening pole teeth of low magnetization, and brushes displaced back of the neutral position to a point where the speed curves under applied alternating or direct current of the same voltage approach coincidence, whereby approximately the same torque and speed are maintained under either of said currents.

4. In an electric motor, the combination of a stator having distributed windings, a commutator, a series wound armature having the conductors inclined with respect to the armature axis, the number of armature turns being largely in excess of the number of stator turns, the field slots being incommensurable with the armature slots, and brushes located back of the neutral position by an amount determined by approximate coincidence of the speed curves under alternating or direct current of the same voltage, whereby approximately the same speed and torque are maintained with either current.

5. In an alternating current motor, the combination of a stator having distributed windings, a toothed armature having its windings connected in series with the stator winding, a commutator, the number of armature turns being largely in excess of stator turns, and two brushes each bridging more than one commutator bar adjusted to a line of commutation where the speed curves under alternating or direct current of the same voltage approach coincidence, whereby approximately the same speed and torque are maintained under either current.

6. A combined alternating and direct current motor, provided with distributed windings t roduce coöperative poles in the two members, the field poles having intervening polar projections of low magnetization, said motor having its brushes located at a point rearward of the neutral point for direct current by an amount determined by approximate coincidence of the speed curves under the same alternating or direct current voltage applied to the motor terminals.

7. A combined alternating and direct current motor, provided with a winding on each of its two members, the interior winding having a large number of turns relatively to the exterior winding, a commutator provided with brushes set in a position where the speed curves under a definite alternating and direct current voltage applied to the motor terminals are in approximate coincidence.

8. A combined alternating and direct current motor, provided with a commutator and windings to produce coöperative poles in its two members, the field poles having intervening salient pole teeth of neutral polarity, the interior winding having a large number of turns relatively to the exterior winding, a commutator, and brushes therefor set at a point in which the speed curves under applied alternating or direct current of definite voltage approximate coincidence.

9. A combined alternating and direct current motor, provided with a commutator and distributed windings to produce coöperative poles on its two members, brushes bearing on the commutator located at a point where the speed curves under definite applied alternating or direct current voltage approach coincidence, said brushes spanning two commutator bars to short circuit a coil.

10. A combined alternating and direct current motor, provided with a stator having a winding producing distributed poles, a rotor having its core slots lying at an angle to the shaft, the rotor having a large number of turns relatively to the stator, a commutator, and brushes applied thereto set at a point of approximate coincidence of the motor speed curves under applied alternating or direct current of the same voltage.

In testimony whereof I affix my signature, in presence of two witnesses.

JAMES BURKE.

Witnesses:
L. K. Sager,
Geo. N. Kerr.

Copies of this patent may be obtained for five cents each, by addressing the "Commissioner of Patents, Washington, D. C."

UNIVERSITY OF ILLINOIS-URBANA
3 0112 079828718